VELUX®

PAL

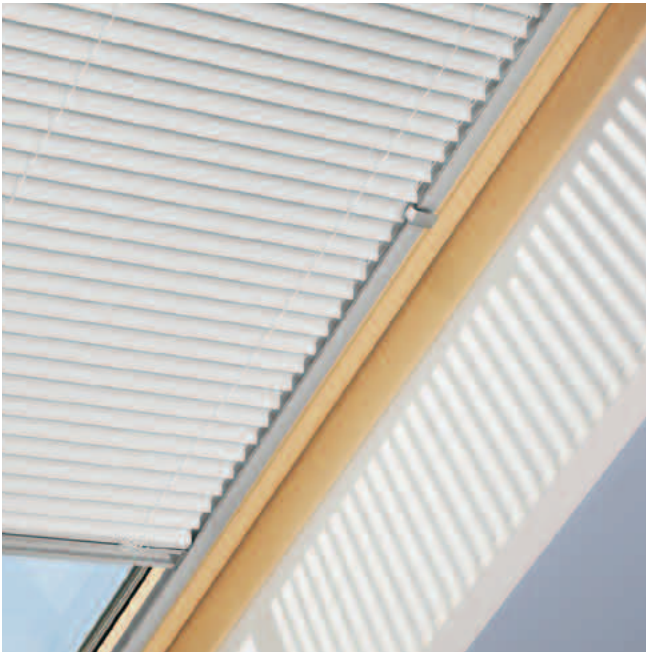

VAS 452174-2010-01

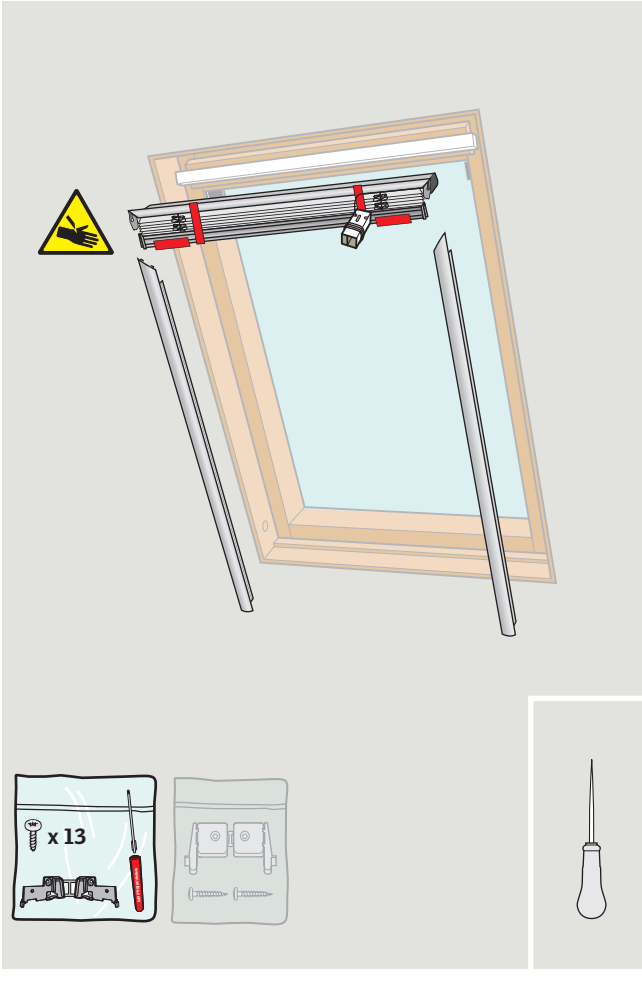

2 VELUX

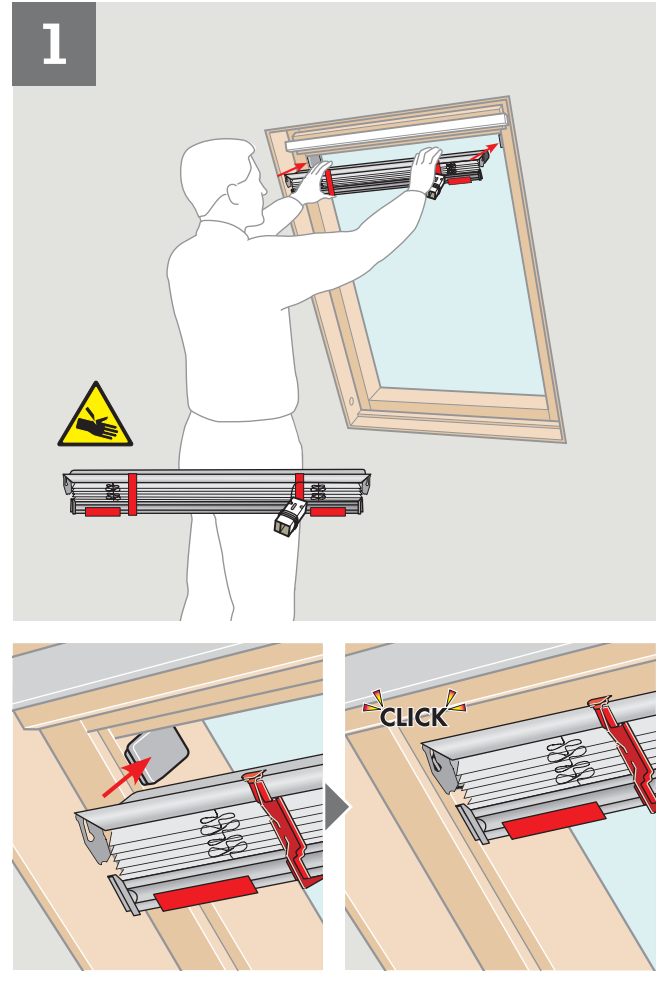

3 VELUX

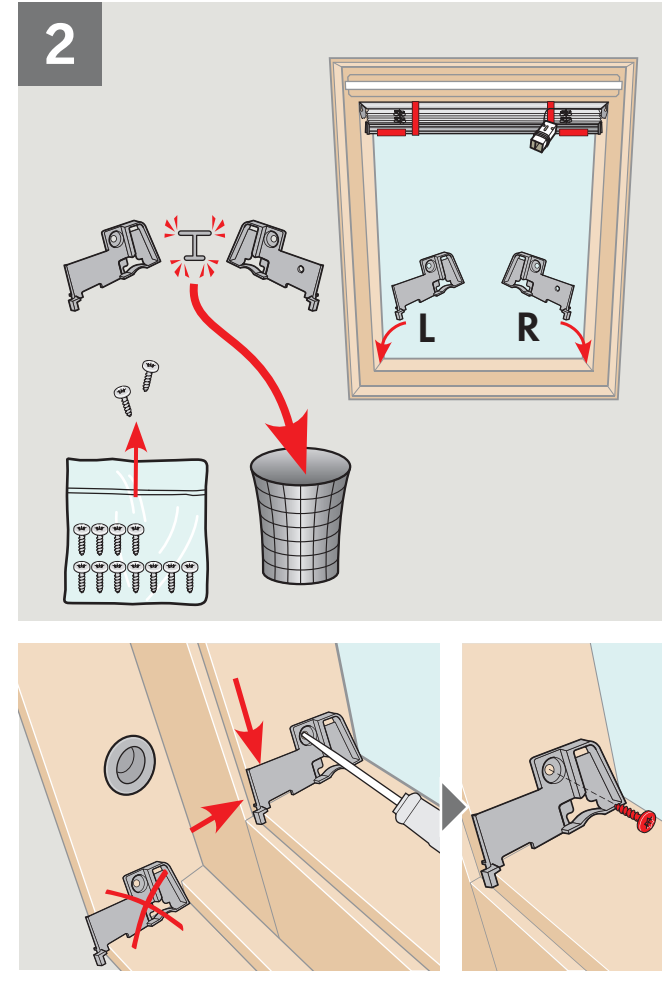

4 VELUX

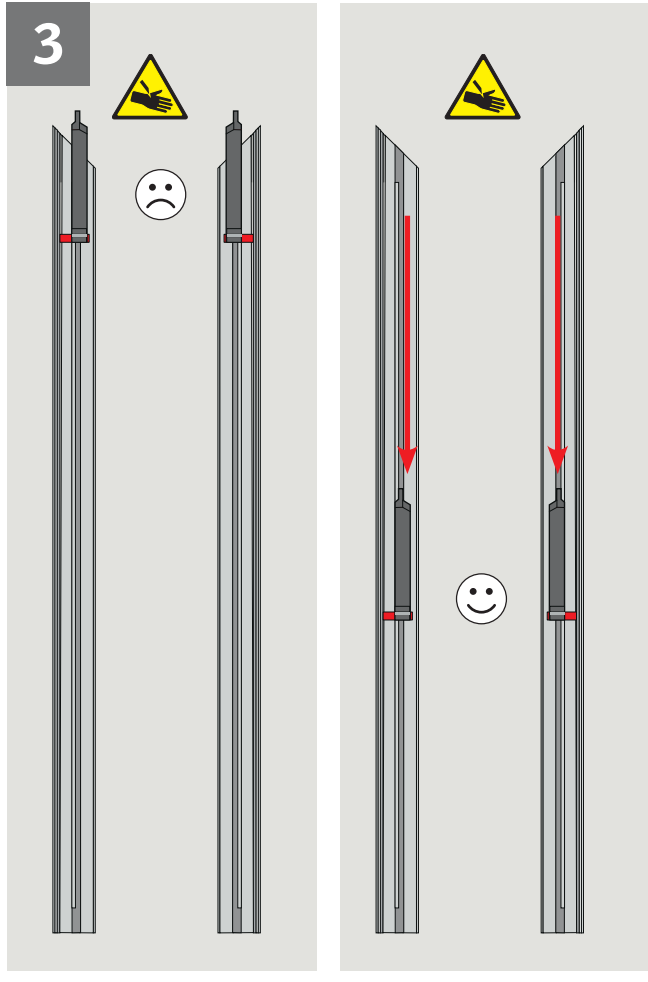

5 VELUX

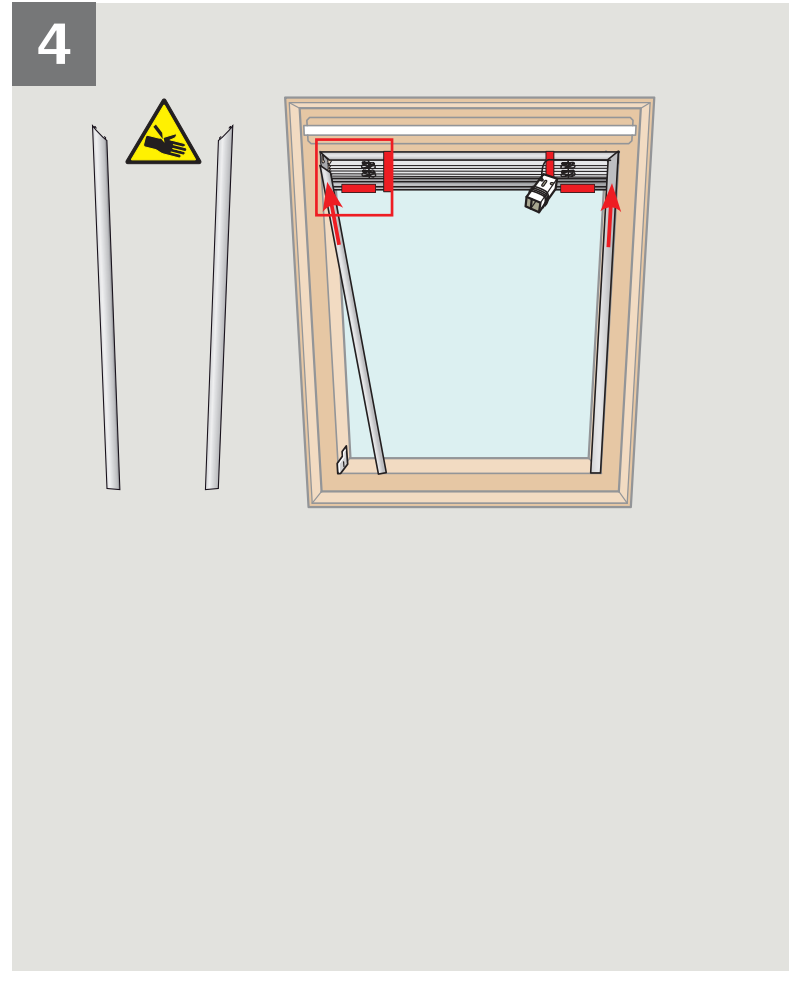

6 VELUX

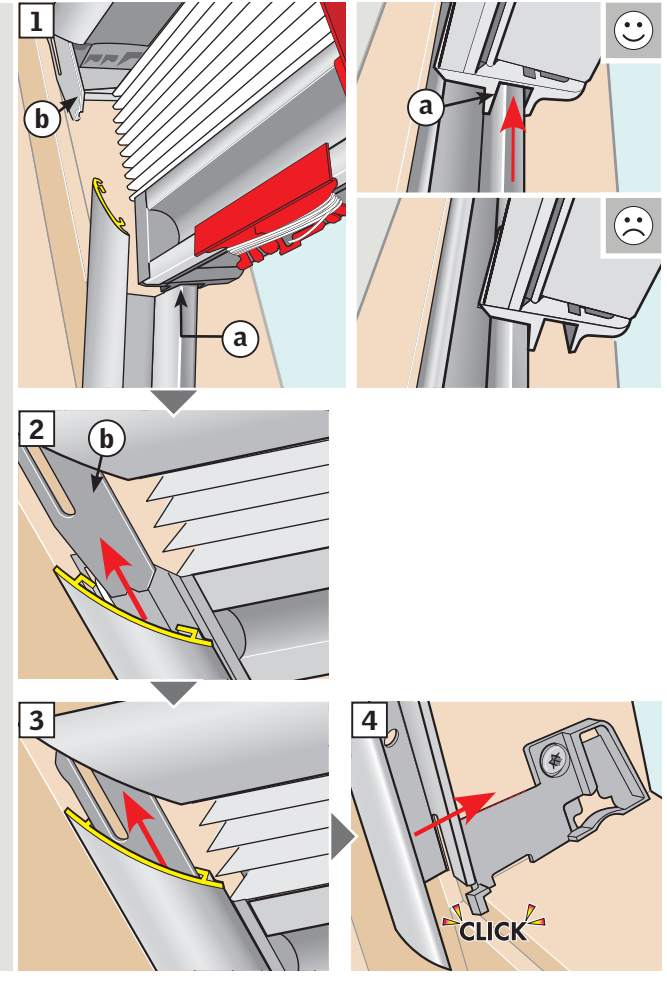

7 VELUX

VELUX®

AR: **VELUX Argentina S.A.**
0 114 711 5666

AT: **VELUX Österreich GmbH**
02245/32 3 50

AU: **VELUX Australia Pty. Ltd.**
1300 859 856

BA: **VELUX Bosna i Hercegovina d.o.o.**
033/626 493, 626 494

BE: **VELUX Belgium**
(010) 42.09.09

BG: **VELUX Bulgaria EOOD**
02/955 95 26

BY: **VELUX Roof Windows FE**
(017) 217 7385

CA: **VELUX Canada Inc.**
1 800 88-VELUX (888-3589)

CH: **VELUX Schweiz AG**
0848 945 549

CL: **VELUX Chile Limitada**
2 953 6789

CN: **VELUX (CHINA) CO. LTD.**
0316-607 27 27

CZ: **VELUX Česká republika, s.r.o.**
531 015 511

DE: **VELUX Deutschland GmbH**
0180-333 33 99

DK: **VELUX Danmark A/S**
45 16 45 16

EE: **VELUX Eesti OÜ**
621 7790

ES: **VELUX Spain, S.A.**
91 509 71 00

FI: **VELUX Suomi Oy**
0207 290 800

FR: **VELUX France**
0821 02 15 15
0,119€ TTC/min

GB: **VELUX Company Ltd.**
01592 778 225

HR: **VELUX Hrvatska d.o.o.**
01/5555 444

HU: **VELUX Magyarország Kft.**
(06/1) 436-0601

IE: **VELUX Company Ltd.**
01 848 8775

IT: **VELUX Italia s.p.a.**
045/6173666

JP: **VELUX-Japan Ltd.**
0570-00-8145

LT: **VELUX Lietuva, UAB**
(85) 270 91 01

LV: **VELUX Latvia SIA**
67 27 77 33

NL: **VELUX Nederland B.V.**
030 - 6 629 629

NO: **VELUX Norge AS**
22 51 06 00

NZ: **VELUX New Zealand Ltd.**
0800 650 445

PL: **VELUX Polska Sp. z o.o.**
(022) 33 77 000 / 33 77 070

PT: **VELUX Portugal, Lda**
21 880 00 60

RO: **VELUX România S.R.L.**
0-8008-83589

RS: **VELUX Srbija d.o.o.**
011 3670 468

RU: **ZAO VELUX**
(495) 737 75 20

SE: **VELUX Svenska AB**
042/20 83 80

SI: **VELUX Slovenija d.o.o.**
01 724 68 68

SK: **VELUX Slovensko, s.r.o.**
(02) 33 000 555

TR: **VELUX Çatı Pencereleri Ticaret Limited Şirketi**
0 216 302 54 10

UA: **VELUX Ukraina TOV**
(044) 2916070

US: **VELUX America Inc.**
1-800-88-VELUX

www.velux.com

INSTALLATION INSTRUCTIONS FOR PAL. © 2010 VELUX GROUP
®VELUX AND THE VELUX LOGO ARE REGISTERED TRADEMARKS USED UNDER LICENCE BY THE VELUX GROUP

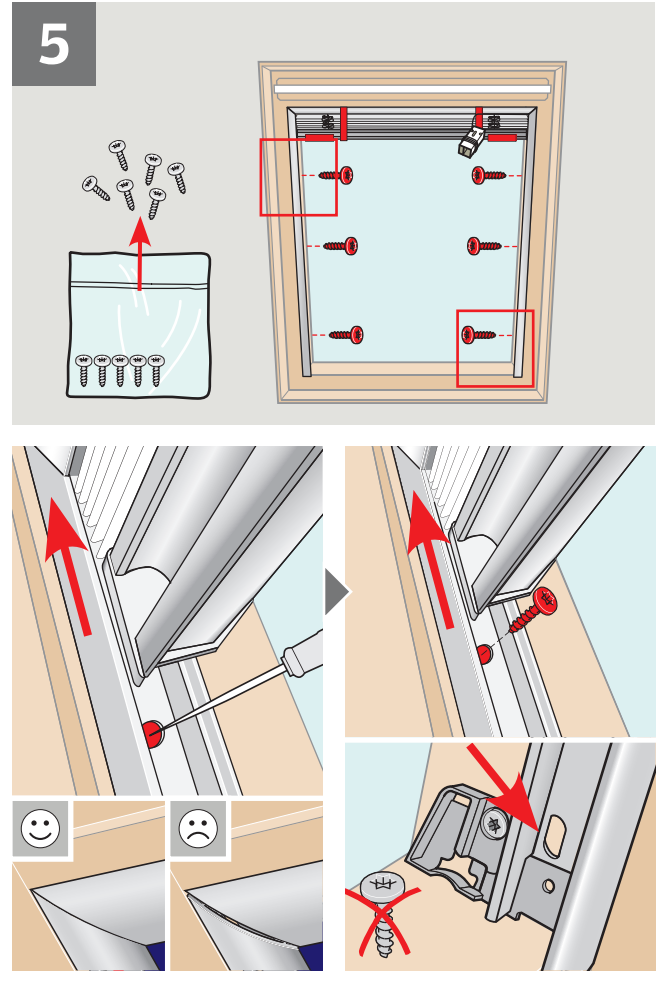

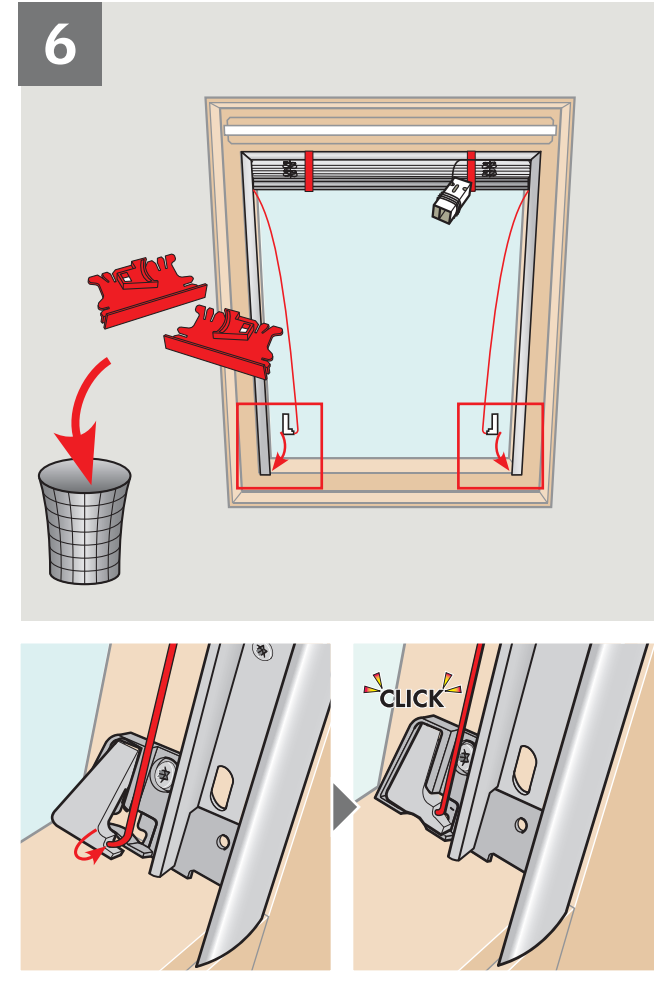

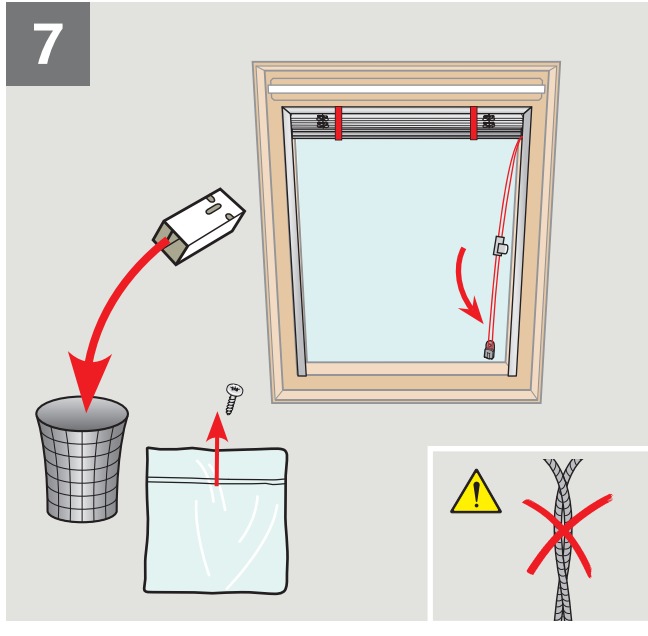

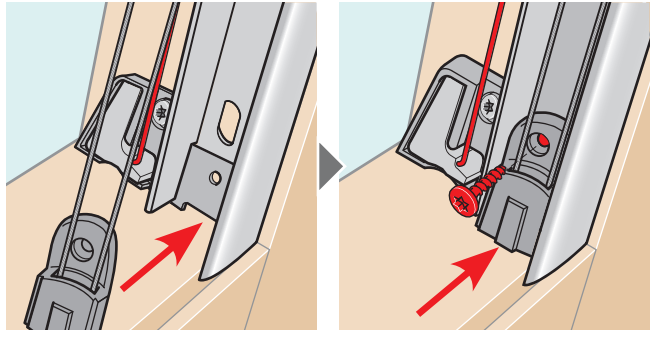

11 VELUX

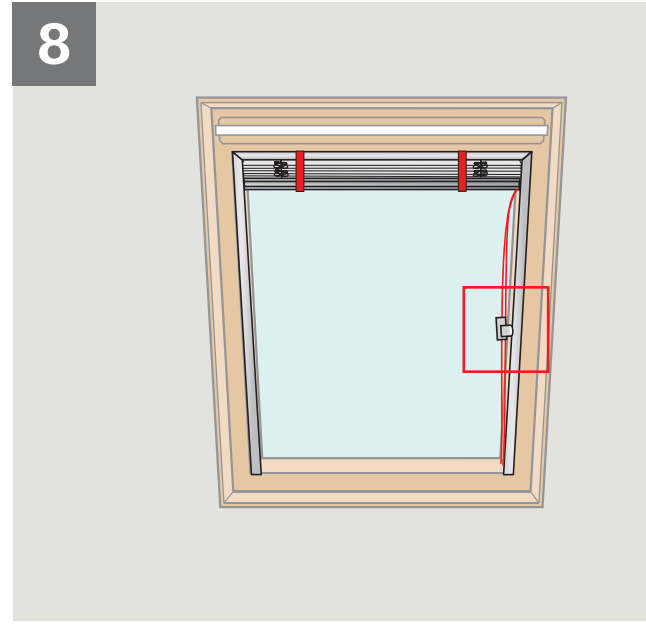

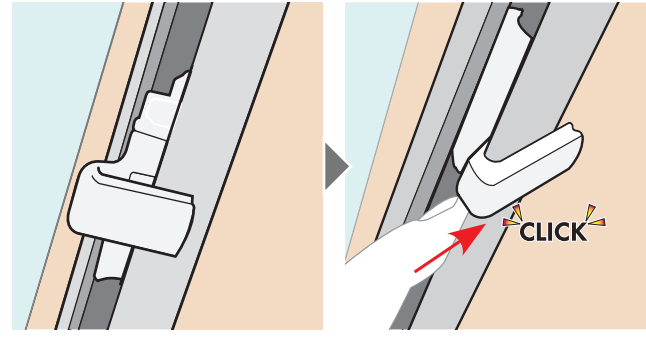

12 VELUX

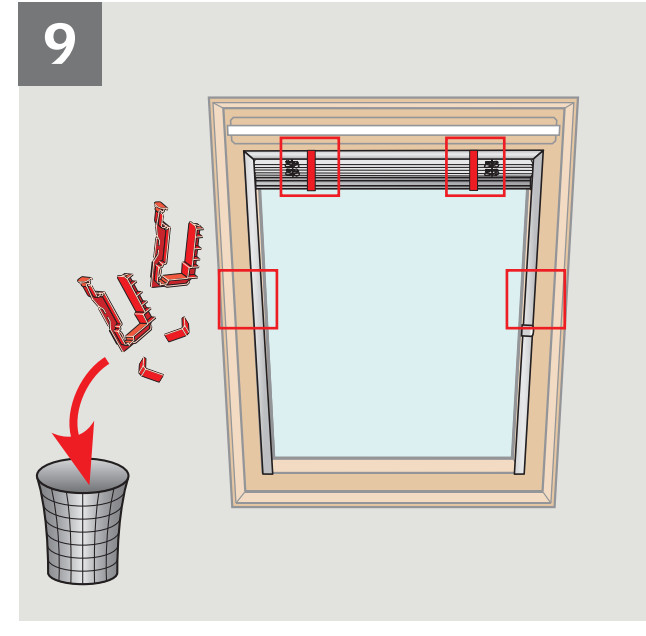

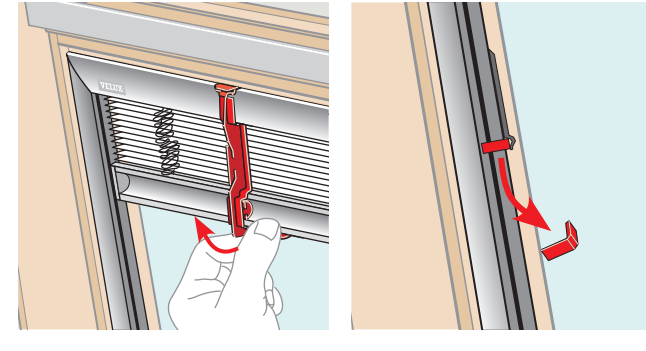

13 VELUX

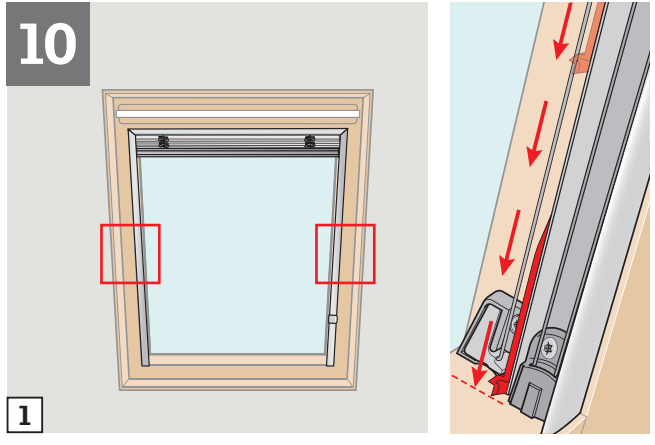
10
1

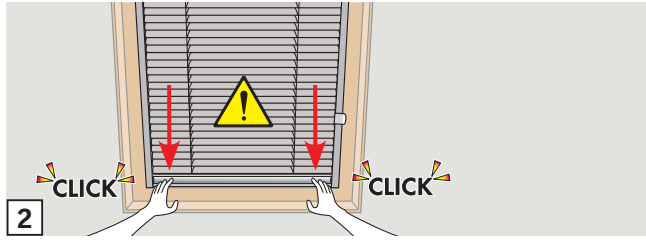
CLICK
CLICK
2

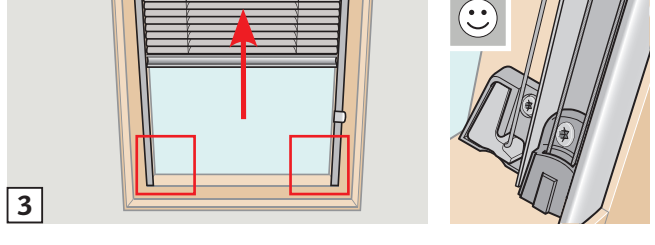
3

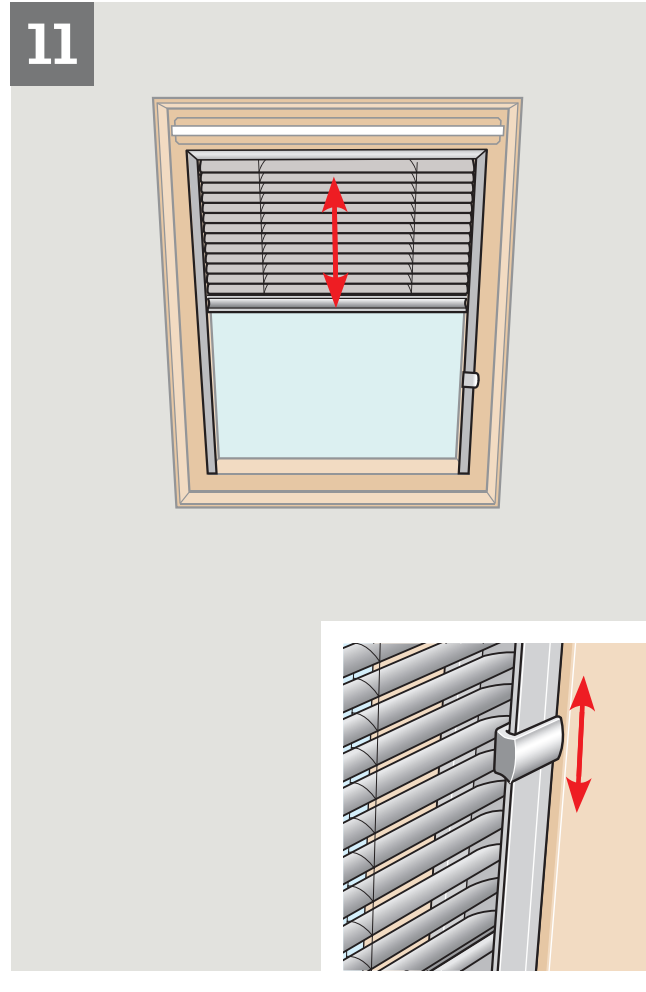
11