CA 2976
2.98 x 4.86 m, 28mm

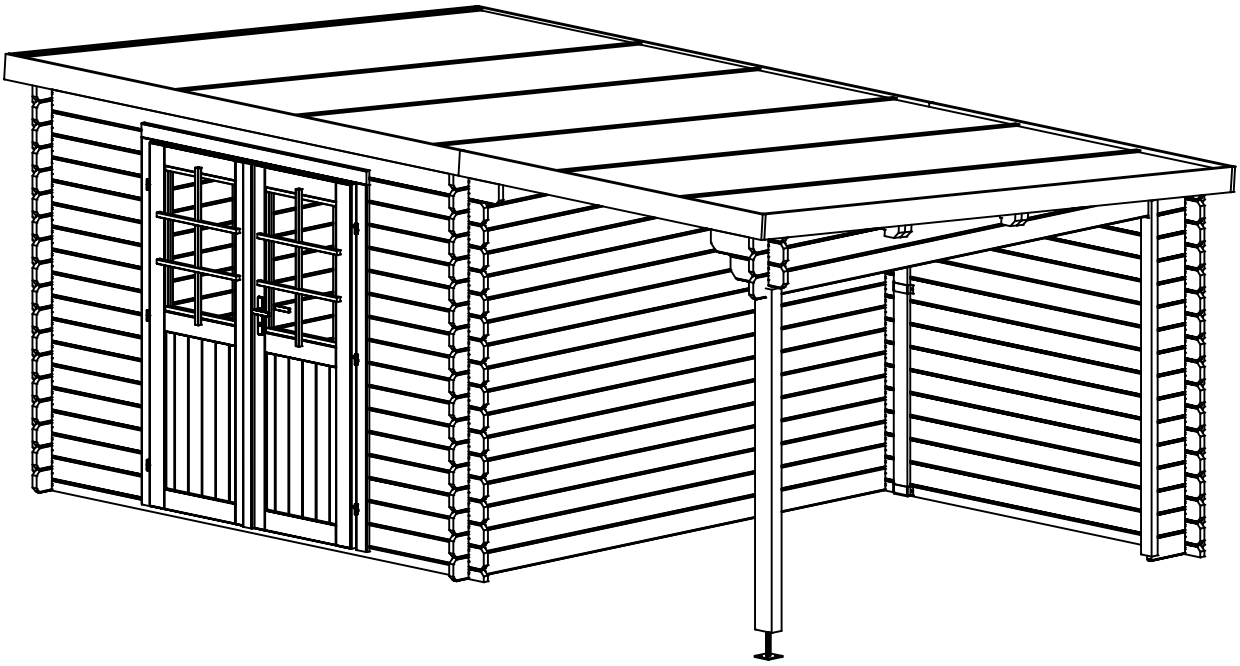

LIST OF ALL PARTS

Pos.	Quantity	Dimension, mm			Details
		A	B	C	
1	x 2	2980	55	28	
2	x 1	1940	55	28	
2a	x 1	1780	90	66	
3	x 32	730	110	28	
4	x 15	480	110	28	
4a	x 1	350	110	28	
5	x 1	450	110	28	
6	x 48+1	2980	110	28	
7	x 15+1	1940	110	28	
8	x 1	3070	110	28	
9a	x 1	1594	102	87	
9b	x 2	1775	82	87	
10	x 2	2980	110	28	
10a	x 2	1980	110	28	
11	x 3	2980	205	28	
12	x 3	892	110	28	
13	x 3	783	62	28	
14	x 1	1630	100		
15	x 2	2980	140	44	
16	x 2	2188	140	44	
17	x 4	208	140	44	
18	x 2	1980	35	16	
18a	x 3	1830	35	16	

LIST OF ALL PARTS

Pos.	Quantity	Dimension, mm			Details	
		A	B	C		
19	x57(+2)	3090	88	17	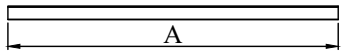	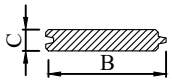
20	x 2	10m	1m		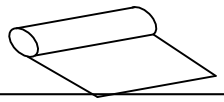	
21	x 14	1545	35	16	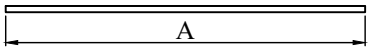	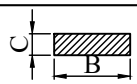
22	x 6	1650	37	37	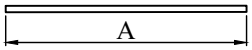	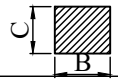
23	x 2+2	3000/2000	90	19	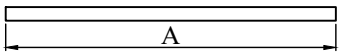	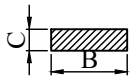
24	x 2	3090	90	19		
25	x 1	1700	70	40	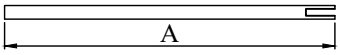	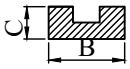
26	x 1	1730	75	19	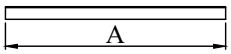	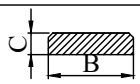
27	x 2	750	28	19	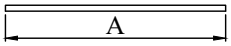	
28	x 4	585	28	19		
29	x 1+1	715	1730	40	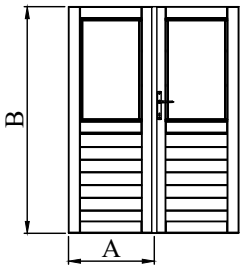	

5 x 70 mm	2 x 40 mm	7,5 x 92mm	6 x 160mm	M6	
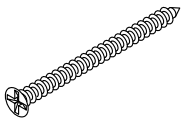 x 12	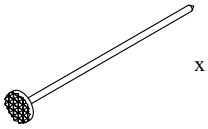 x 240	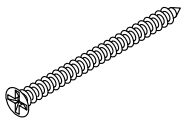 x 4	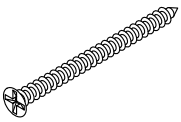 x 14	x 11	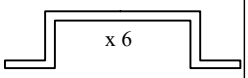 x 6
4 x 40mm	1,8 x 30 mm	3 x 20 mm	5 x 90mm	M6	M8
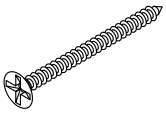 x 94	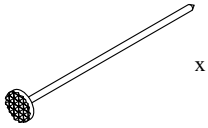 x 56	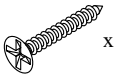 x 12	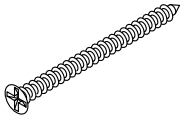 x 9	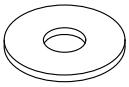 x 22	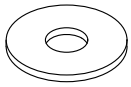 x 4
4 x 50mm	US-40-01	15x57+40x40BZN	AH9213	6 x 60	6 x 40
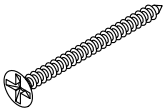 x 24	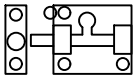 x2	x 6	x 1	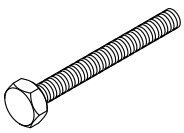 x 5	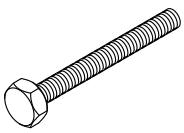 x6

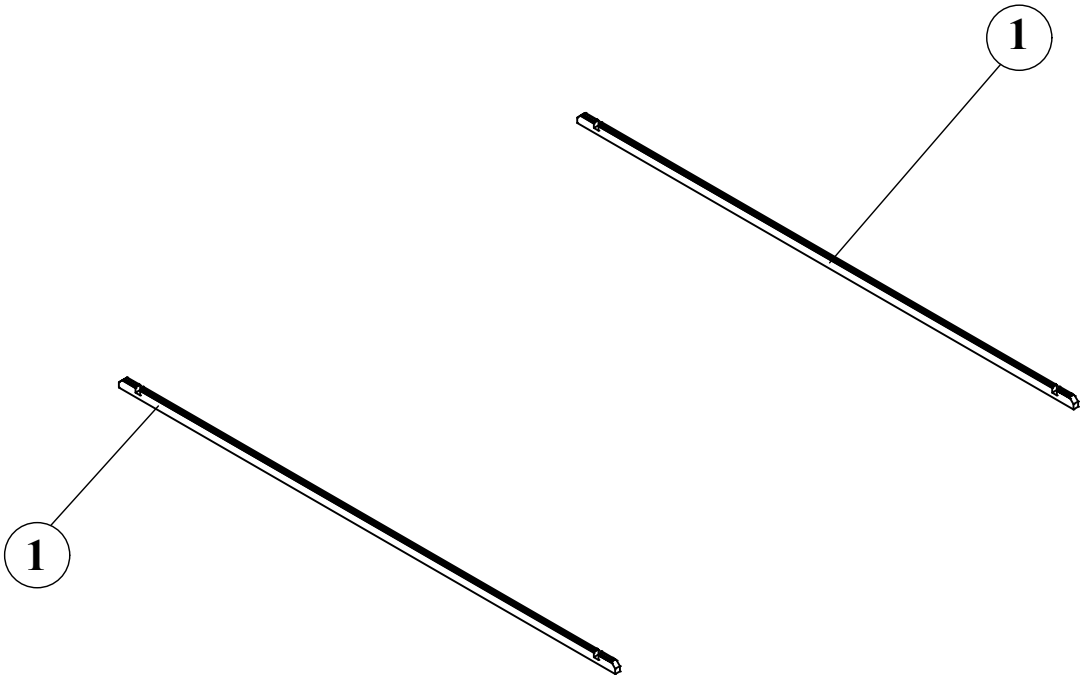

Position	Dimension (mm)	Quantity
1	2980 x 55 x 28	2

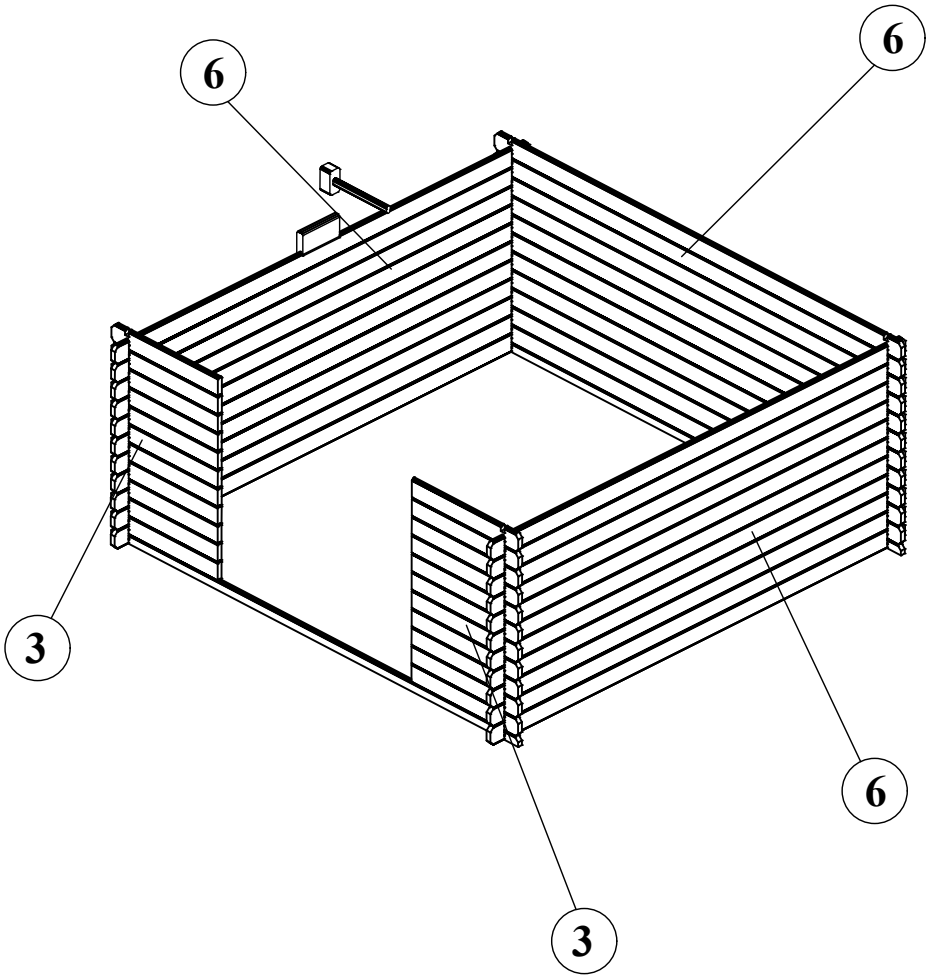

Position	Dimension (mm)	Quantity
3	730 x 110 x 28	32
6	2980 x 110 x 28	48+1

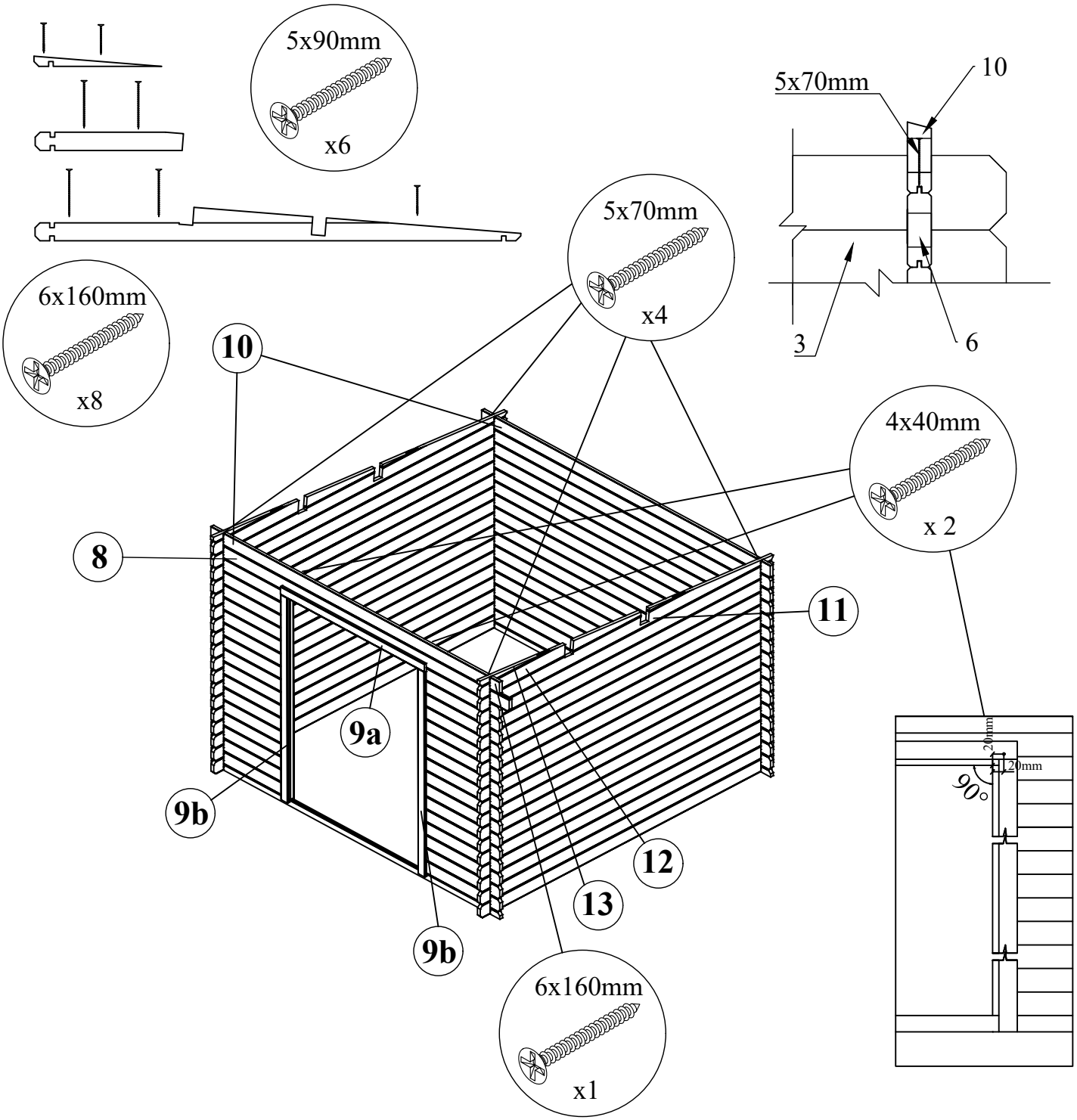

Position	Dimension (mm)	Quantity
8	3070 x 110 x 28	1
9a	1594 x 102 x 87	1
9b	1775 x 82 x 87	2
10	2980 x 110 x 28	2
11	2980 x 205 x 28	2
12	892 x 110 x 28	2
13	783 x 62 x 28	2

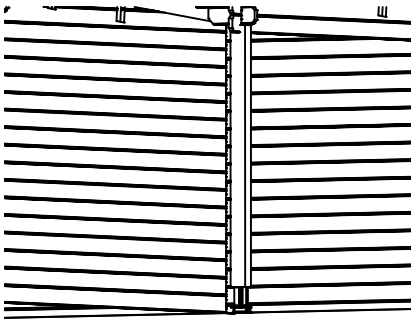

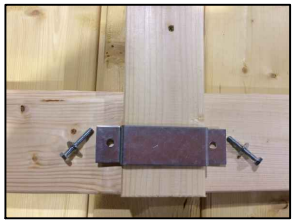

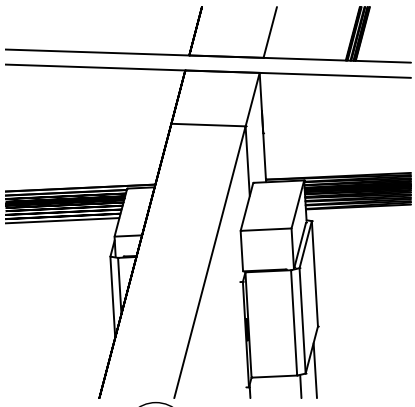

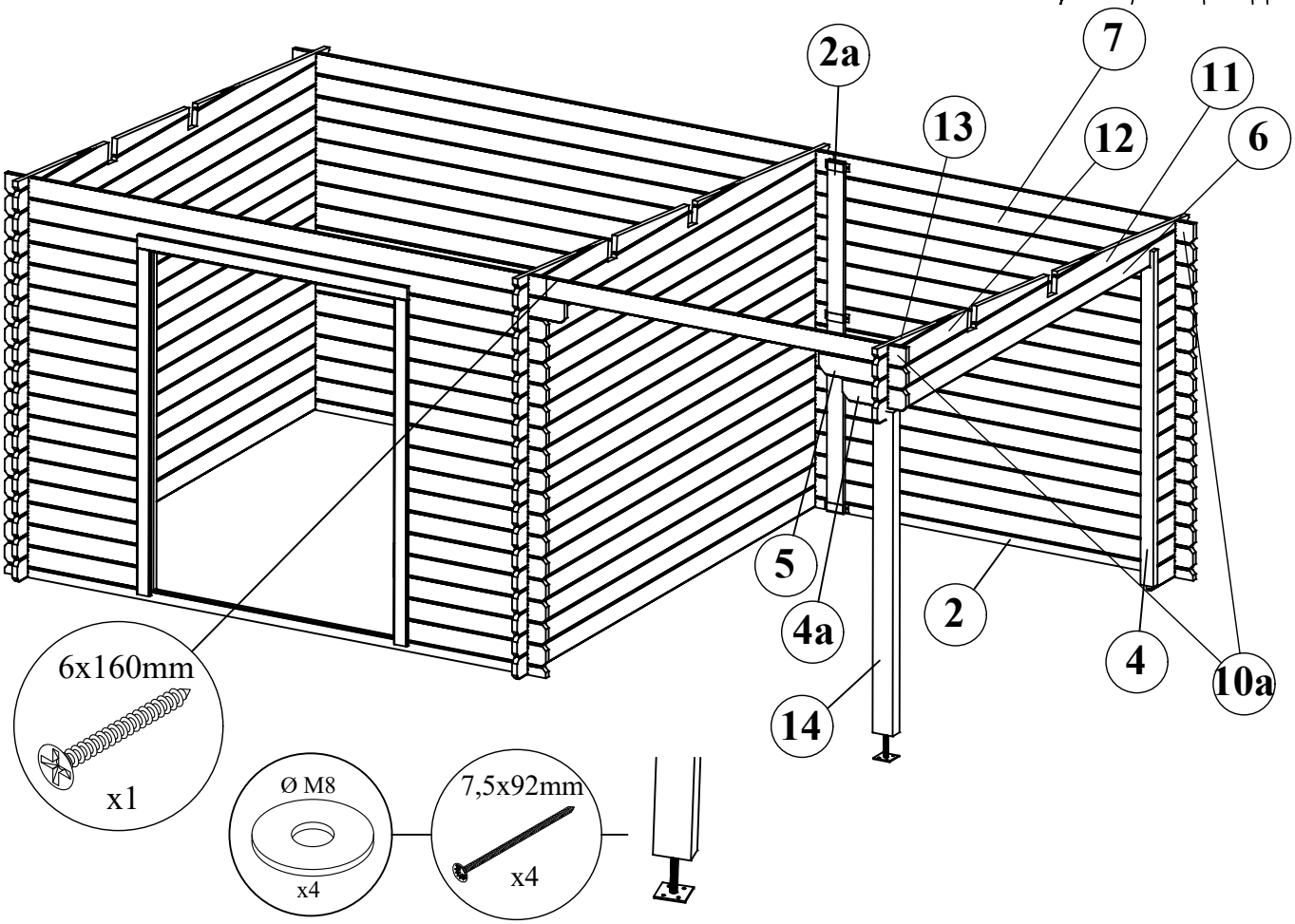

Position	Dimension (mm)	Quantity
2	1940 x 55 x 28	1
2a	1780 x 90 x 66	1
4	480 x 110 x 28	15
4a	350 x 110 x 28	1
5	450 x 110 x 28	1
7	1940 x 110 x 28	15+1
10a	1980 x 110 x 28	2
11	2980 x 205 x 28	1
12	892 x 110 x 28	1
13	783 x 62 x 28	1
14	1630 x 100 x 70	1

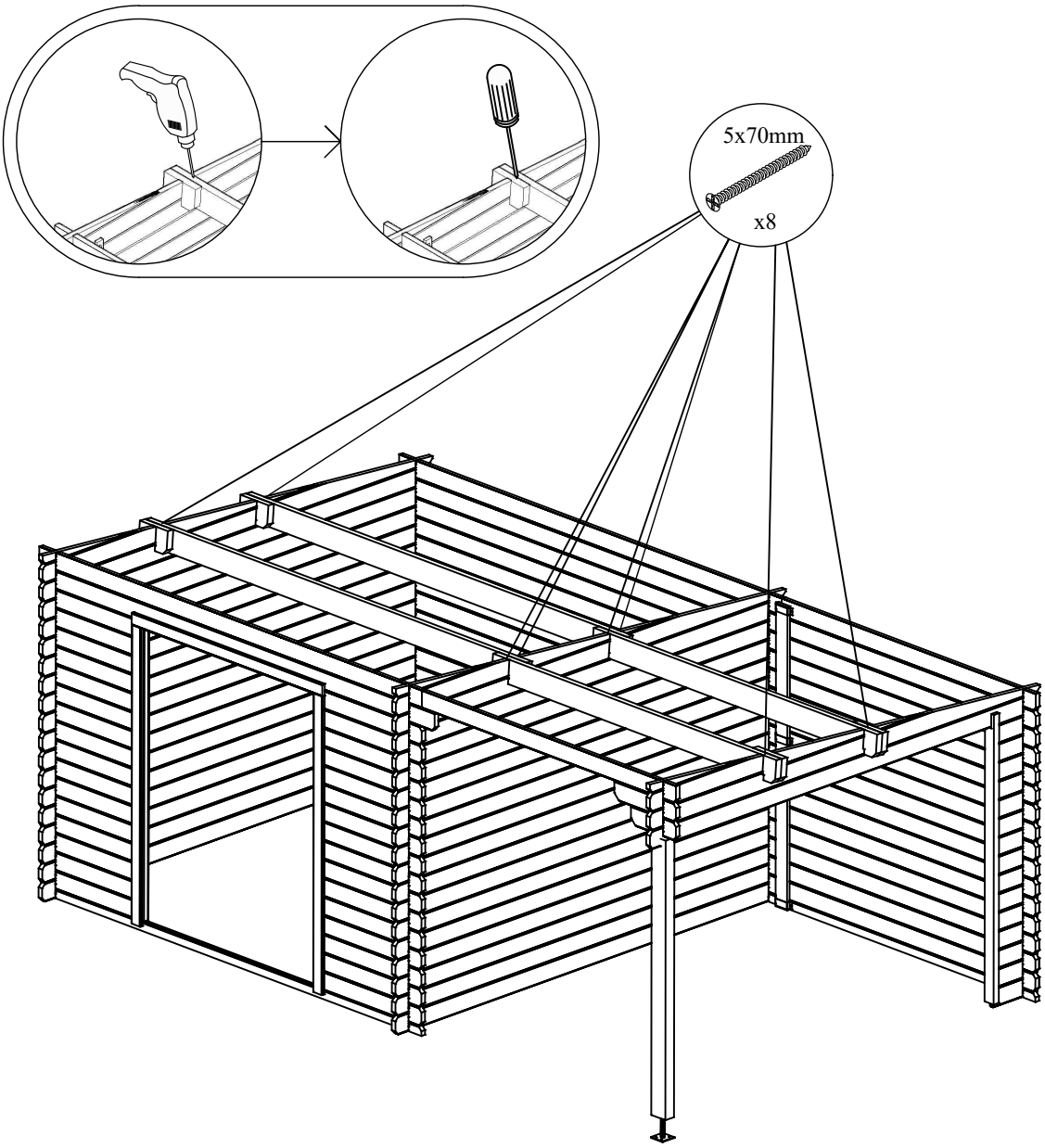

Position	Dimension (mm)	Quantity
15	2980 x 140 x 44	2
16	2188 x 140 x 44	2
17	208 x 140 x 44	4

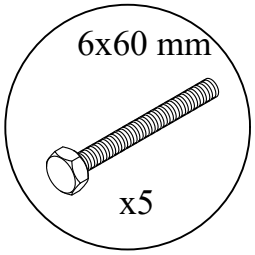

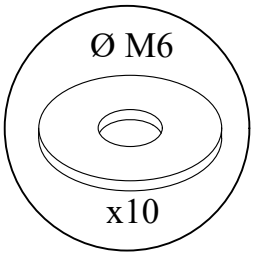

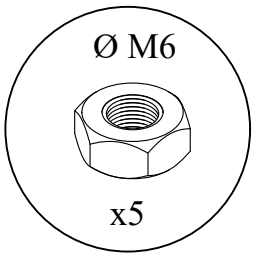

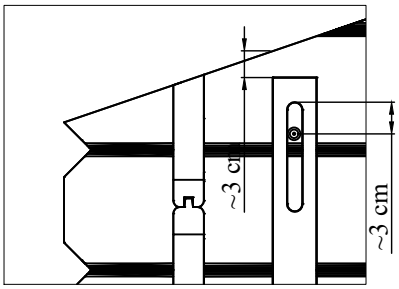

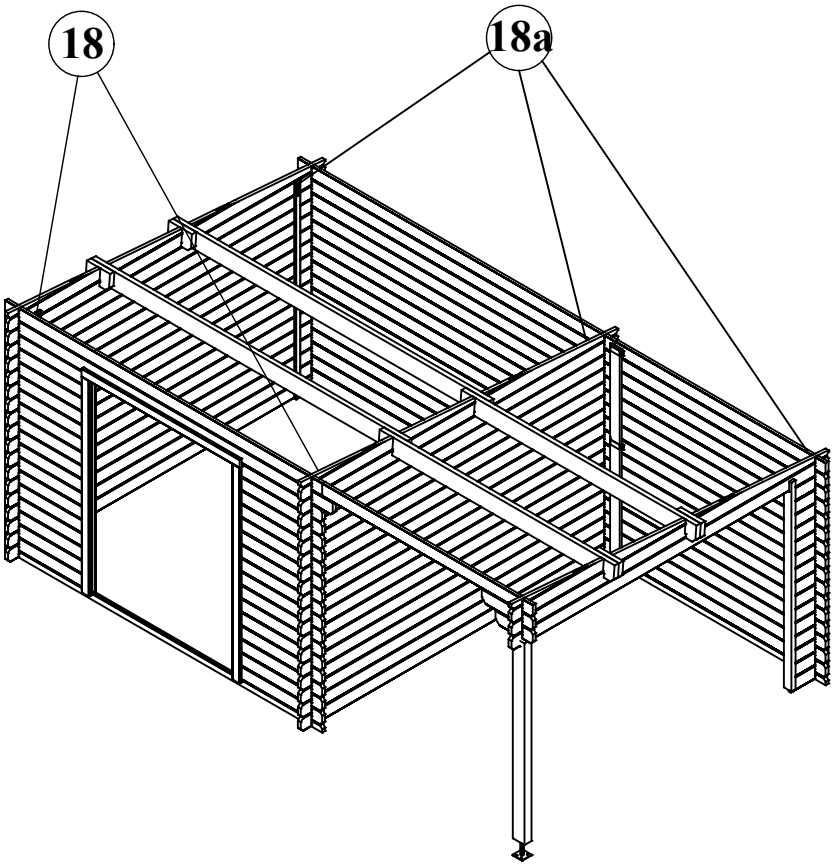

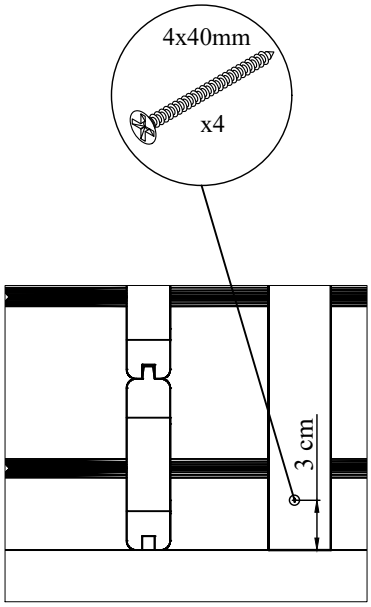

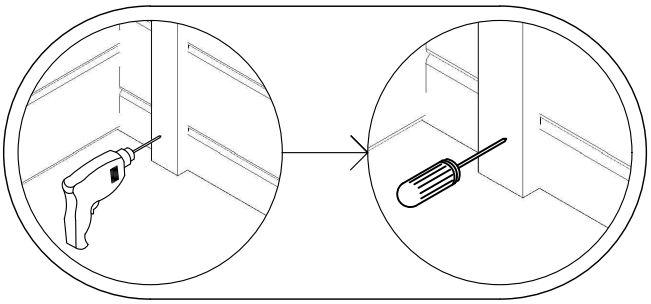

Position	Dimension (mm)	Quantity
18	1980 x 35 x 16	2
18a	1830 x 35 x 16	3

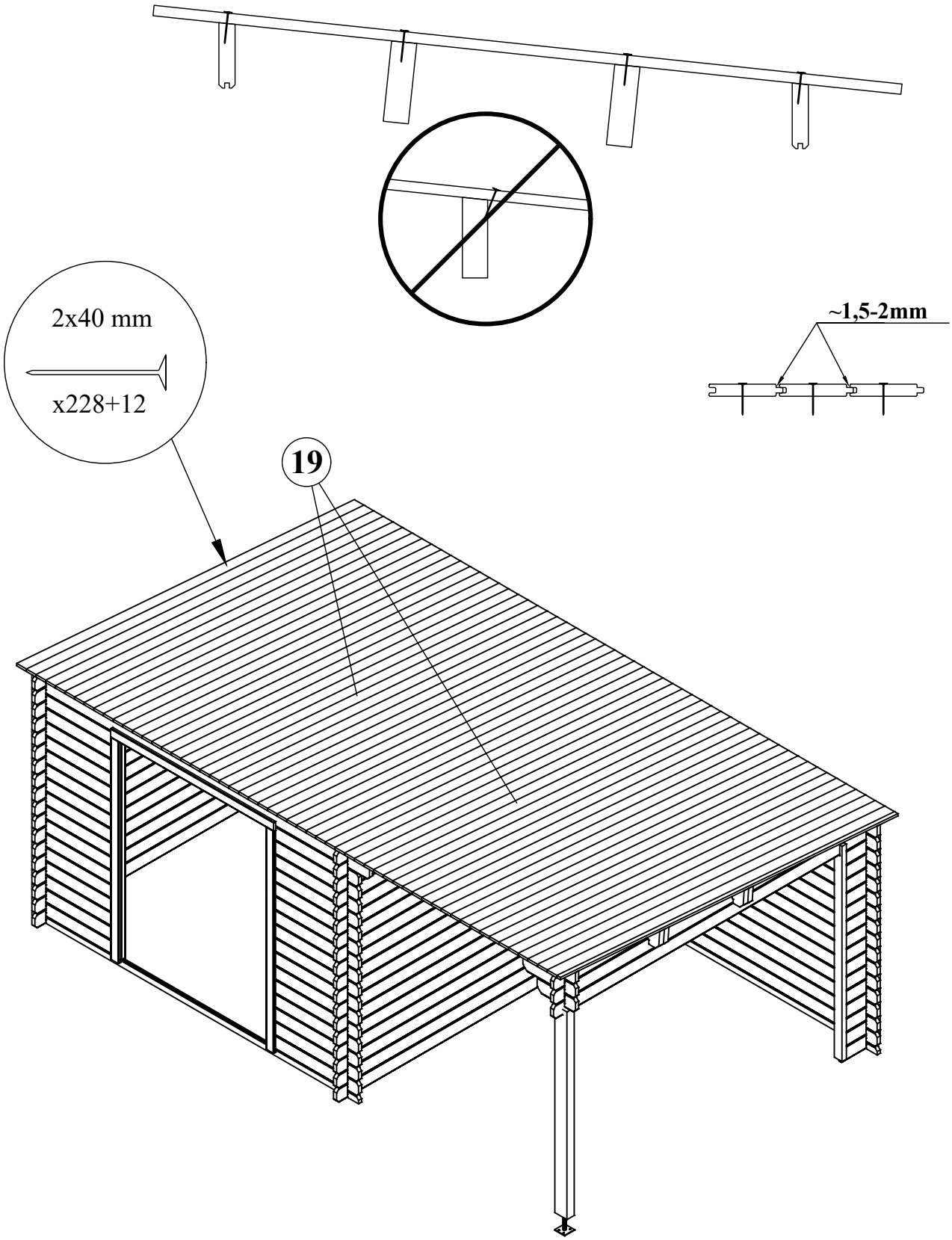

Position	Dimension (mm)	Quantity
19	3090 x 88 x 17	57 (+2)

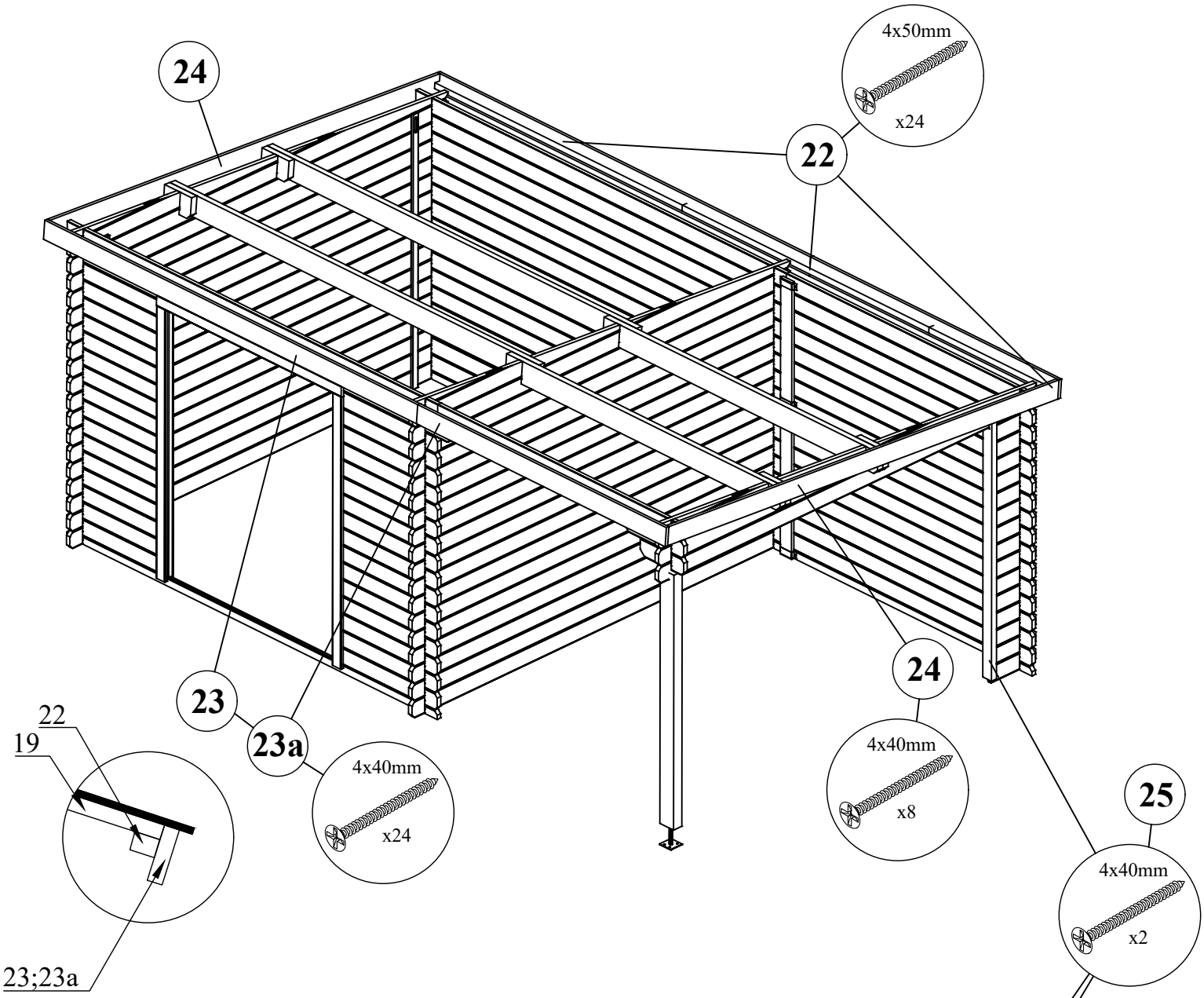

Position	Dimension (mm)	Quantity
22	1650 x 37 x 37	6
23/23a	3000/2000 x 90 x 19	2+2
24	3090 x 90 x 19	2
25	1700 x 70 x 40	1

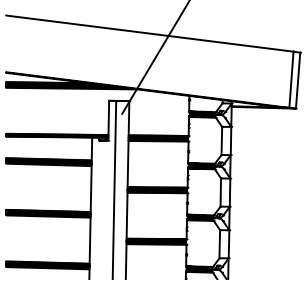

2 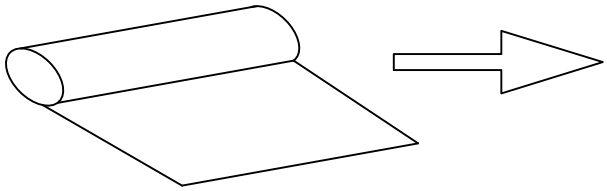 **6 3130 x 1000**

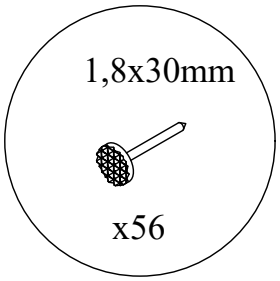

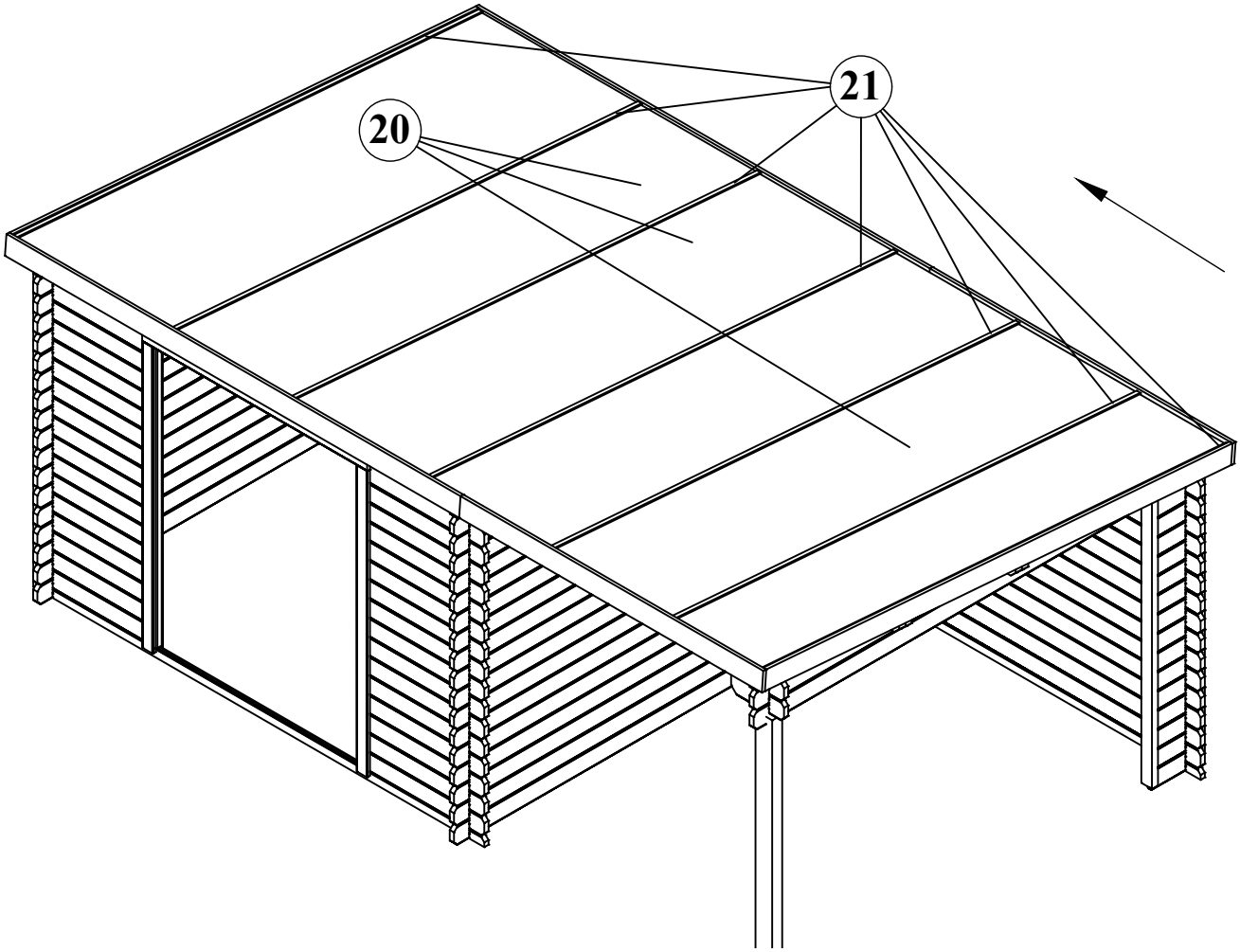

Position	Dimension (mm)	Quantity
20	3130 x 1000	6
21	1545 x 35 x 16	14

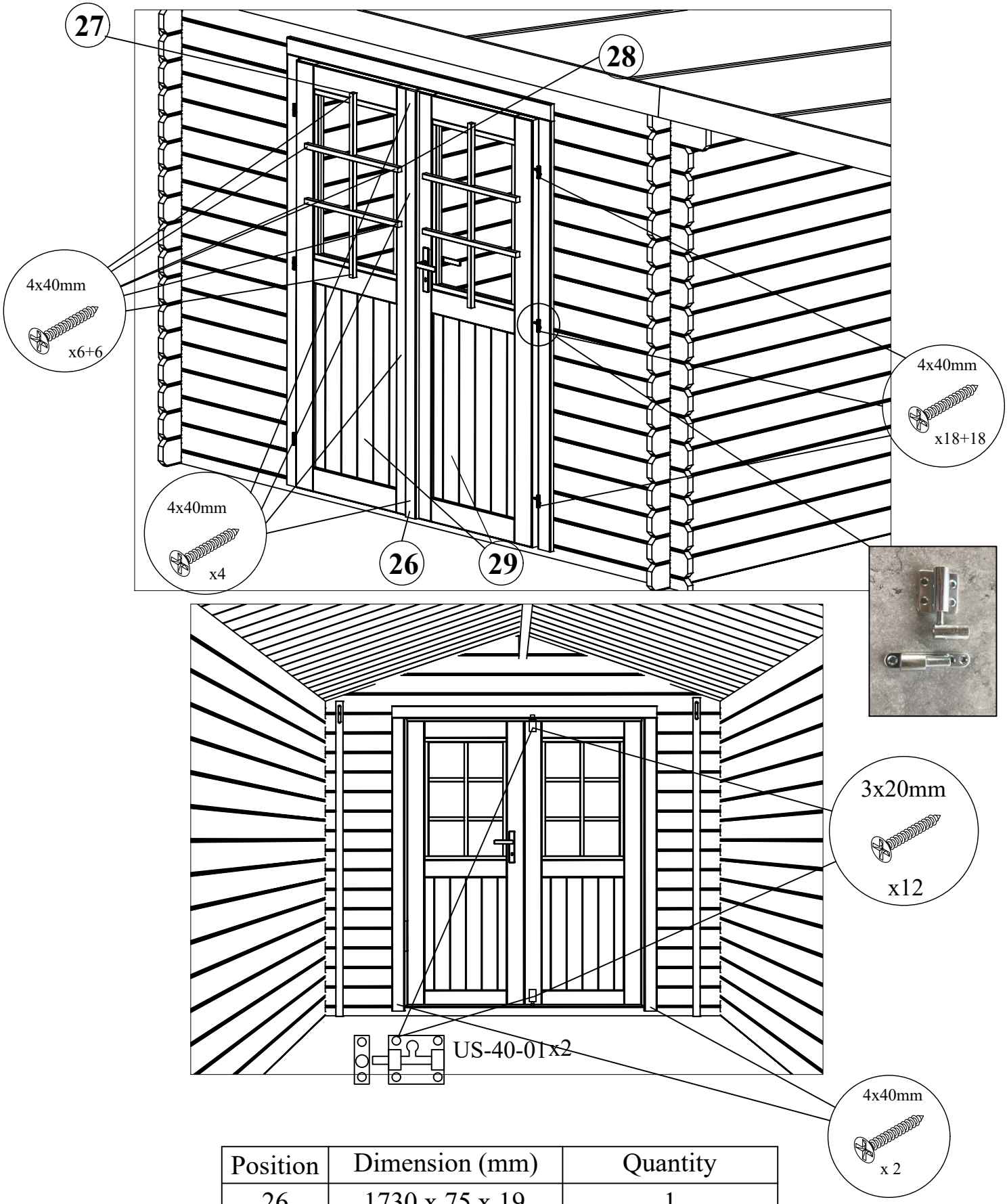

Position	Dimension (mm)	Quantity
26	1730 x 75 x 19	1
27	750 x 28 x 19	2
28	585 x 28 x 19	4
29	1730 x 715	1 + 1

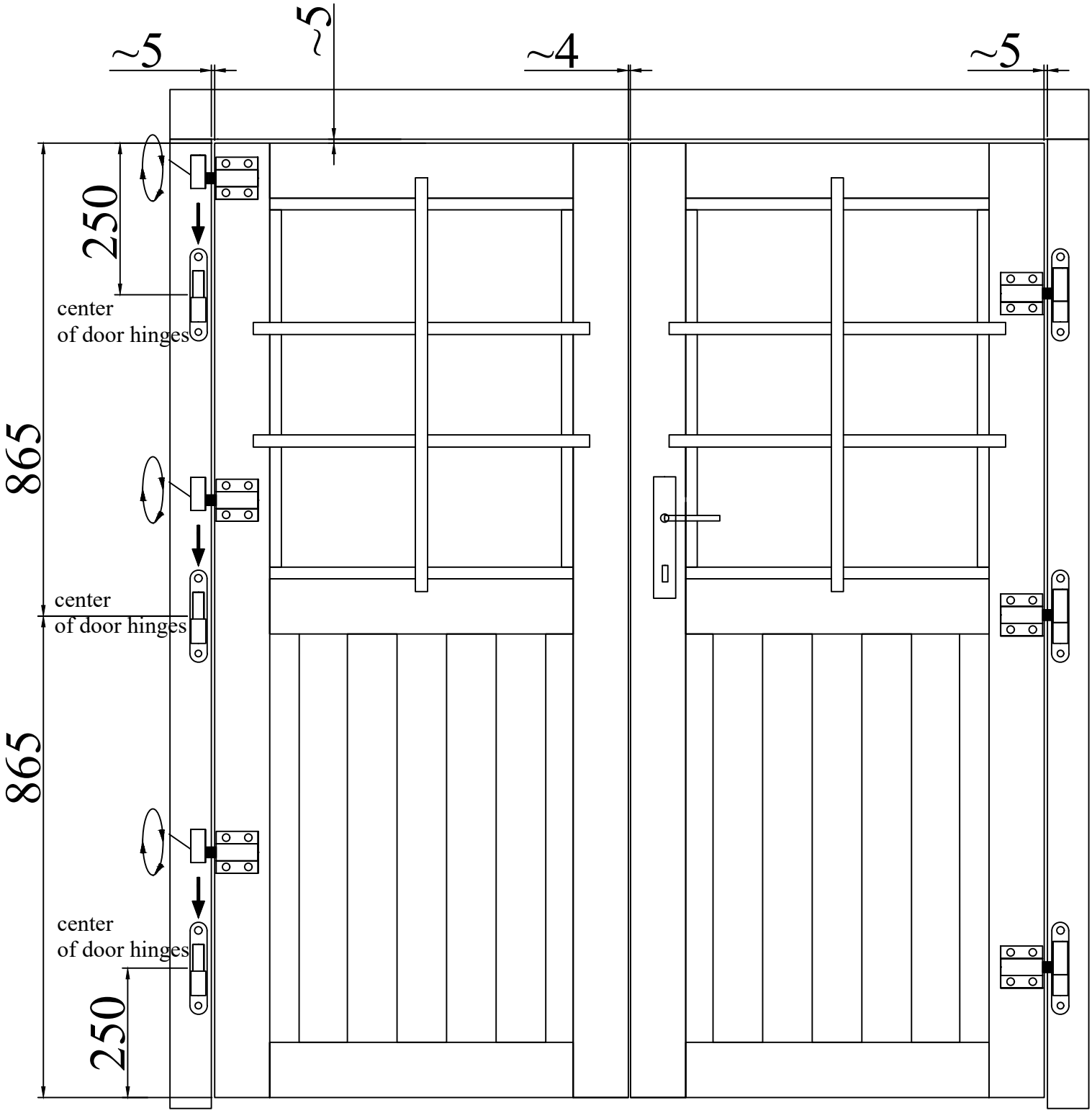
~5
~5
~4
~5
250
center
of door hinges
865
center
of door hinges
865
center
of door hinges
250