ASSEMBLY INSTRUCTIONS

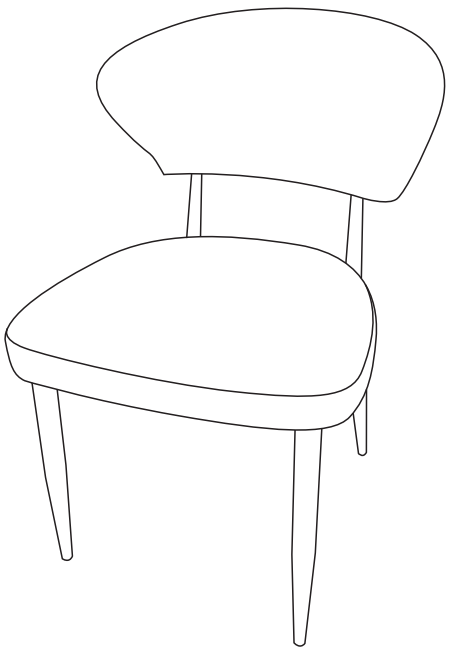

1

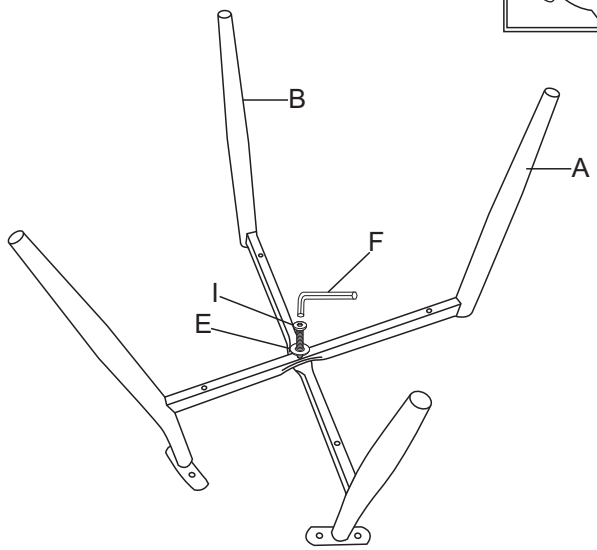

2

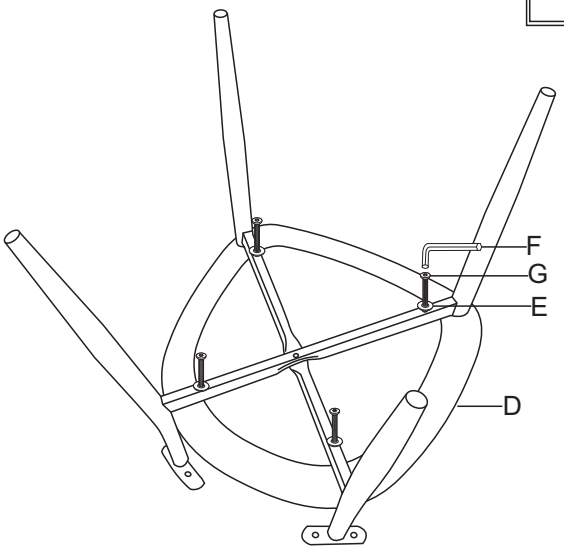

3

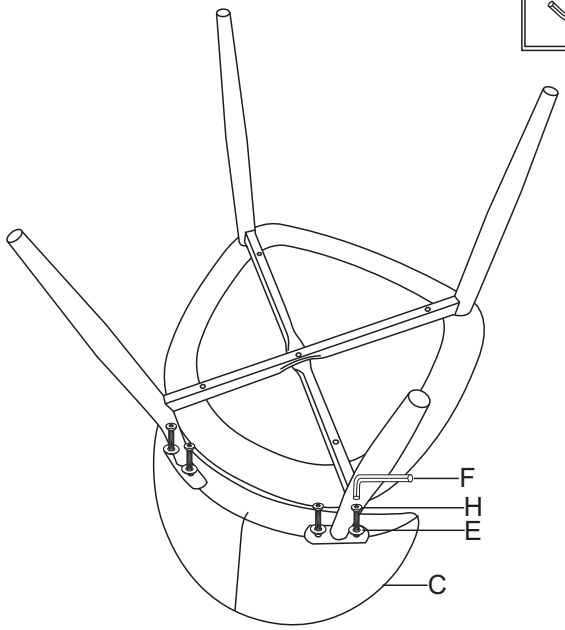

Ax1 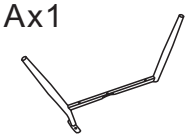	Bx1	Cx1	Dx1	Ex9 M6x16mm	Fx1 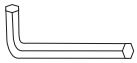
Gx4 M6x45mm	Hx4 M6x35mm	Ix1 M6x32mm			

【Kindly Remember】

If the products you receive in this package are not all of the items you purchased, please be patient. The rest of the products will be delivered by other packages.
If you would like to know where the rest of the package has arrived, please contact us through Amazon. We will get back to you within 12 hours.

You can contact us in the following ways：

1.Find your order in the list and Select 【Problem with order】.

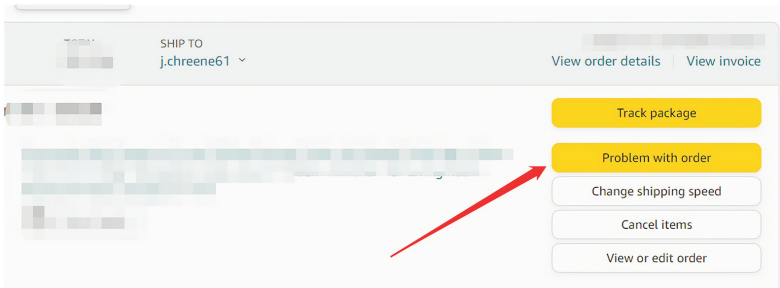

2. Choose your topic from list displayed and Select 【Contact seller】.

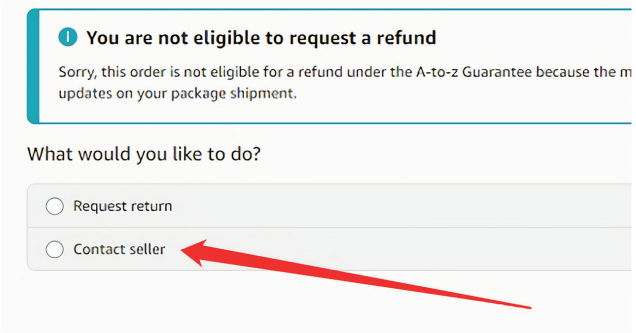

3. We will get back to you immediately as soon as we receive your message.