ASSEMBLY INSTRUCTIONS
3 DOORS ARMOIRE

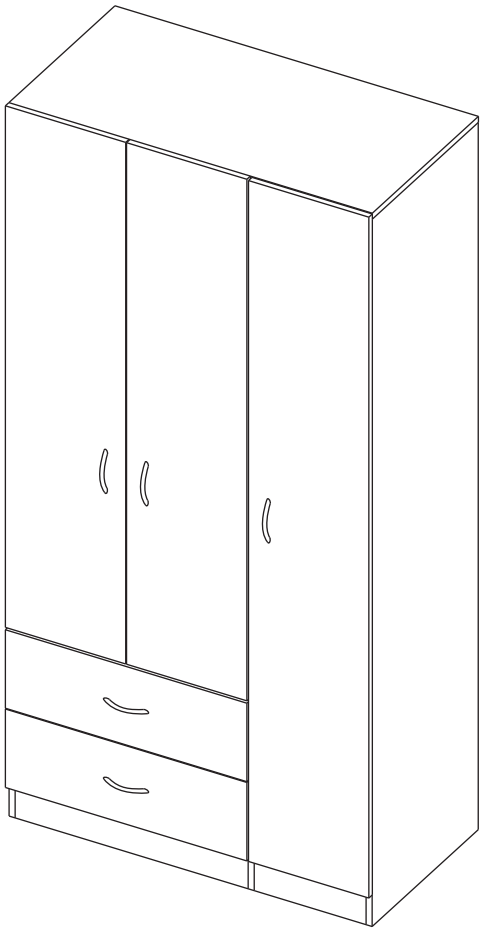

THIS FURNITURE MUST BE FIXED TO THE WALL

⚠ WARNING

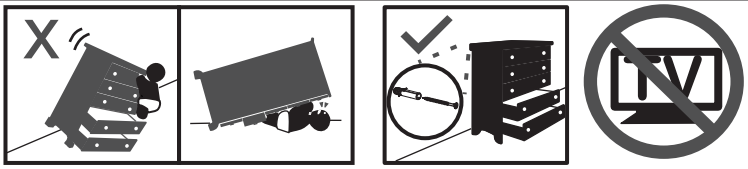

Children have died from furniture tip over. To reduce the risk of tip over:

- ALWAYS secure this furniture to the wall using a wall anchor.
- NEVER allow children to stand, climb, or hang on drawers, doors or shelves.
- Do not defeat or remove the drawer interlock system.
- Place heaviest items in the lowest drawers.
- NEVER put a TV on this furniture.

To ensure the safety of those using this cabinet, it is crucial to properly secure it to the wall using a wall anchor . This product includes the necessary items for fixing the furniture to the wall. However, it is important to note that incorrect installation or failure to use the tip-over device can result in serious injury or even death.
For this reason, we highly recommend that a professional installer handle the installation of the cabinet to the wall.

LOT N°

IMPORTANT RECOMMENDATIONS

Do not paint the cabinet.

The cabinet MUST be used exclusively indoors, do not expose to direct sun.

Clean metallic hardware with a dry cloth.

Do NOT overload the cabinet (see suggested loads).

Do not hit or hammer the cabinet (just when indicated).

Clean with a slightly damp cloth, use gentle soaps.

Do not drag, lift and move between two people.

Avoid direct contact with water, fire or exposure to heat sources.

WARNING

Never allow children to climb or manipulate the cabinet, furniture tip over can cause serious injuries or death.

RECOMENDACIONES IMPORTANTES

No pintar el mueble.

El mueble debe ser usado únicamente en interiores, no exponer al sol directo.

Limpiar los herrajes metálicos con un paño seco.

NO sobrecargar el mueble (ver las cargas sugeridas).

No golpear ni martillar el mueble (solo cuando se indique).

Limpiar con un paño ligeramente húmedo, usar jabones suaves.

No arrastre el mueble, levántelo entre dos personas.

Evite el contacto directo con el agua, el fuego o la exposición a fuentes de calor.

ADVERTENCIA

Nunca permita que los niños escalen o manipulen el mueble, la caída de este puede provocar lesiones graves o la muerte.

INDEX

Assembly Hardware 4

Assembly Parts 5

Suggested Loads 6

Assembly Recommendations 6

Assembly Steps 7-22

Warranty 23

ÍNDICE

Herrajes para Armado 4

Piezas de Armado 5

Cargas Sugeridas 6

Recomendaciones de Ensamble 6

Pasos de Armado 7-22

Garantía 23

REQUIRED TOOLS*

HERRAMIENTAS NECESARIAS*

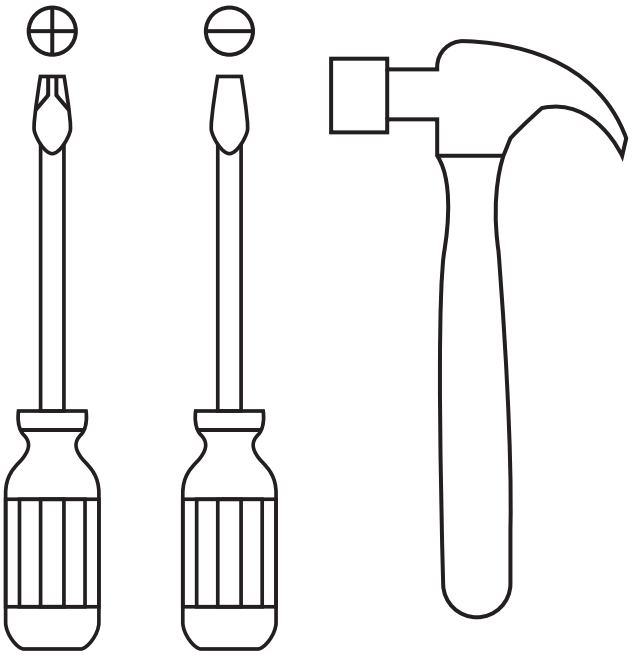

*Not included, and not shown actual size.

*No incluidas y no se muestran en tamaño real.

ASSEMBLY HARDWARE

HERRAJES PARA ARMADO

Please check that the hardware content is correct. If any item is missing, please call to our customer service line.

Compruebe que el contenido de los herrajes sea el correcto. En caso de que falte alguna pieza, por favor llame a nuestra línea de atención al cliente.

x24

Minifix Cams
Minifix

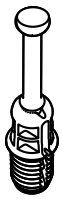

x24

Spreading Bolt
Perno Minifix

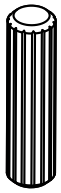

x38

Wood Dowel
Tarugo

x24

Cover Caps
Tapa Adhesiva Minifix

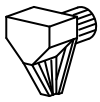

x8

Shelf Support
Soporte Entrepaño

x10

Flat Head Screw
Tornillo Lámina

x2

Closet Rod Bracket
Soporte Tubo

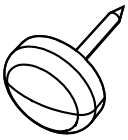

x10

Nail-on Glide
Deslizador Puntilla

x8

Drywall Screw
Tornillo de Ensamble

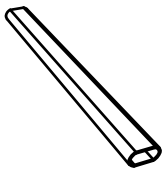

x1

Closet Rod
Tubo Ovalado

x50

Nail
Puntilla

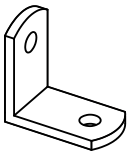

x2

Corner Brace
Cantonera

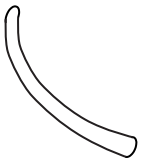

x5

Handle
Manija Acero

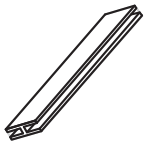

x1

H profile
Perfil H

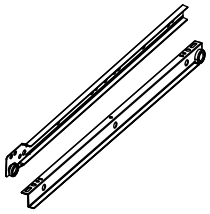

x2

Drawer Slides
Rieles

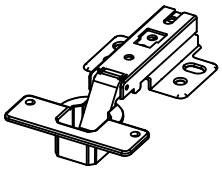

x6

Full Overlay Hinge
Bisagra Parche

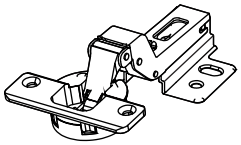

x3

Half Overlay Hinge
Bisagra Semi Parche

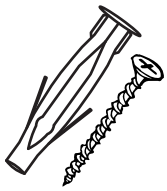

x2

Wall anchor + screw 2 1/2"
Chazo + tornillo 2 1/2"

Hardware items are NOT shown actual size.

Los herrajes no se muestran en el tamaño real.

ASSEMBLY PARTS PIEZAS DE ARMADO

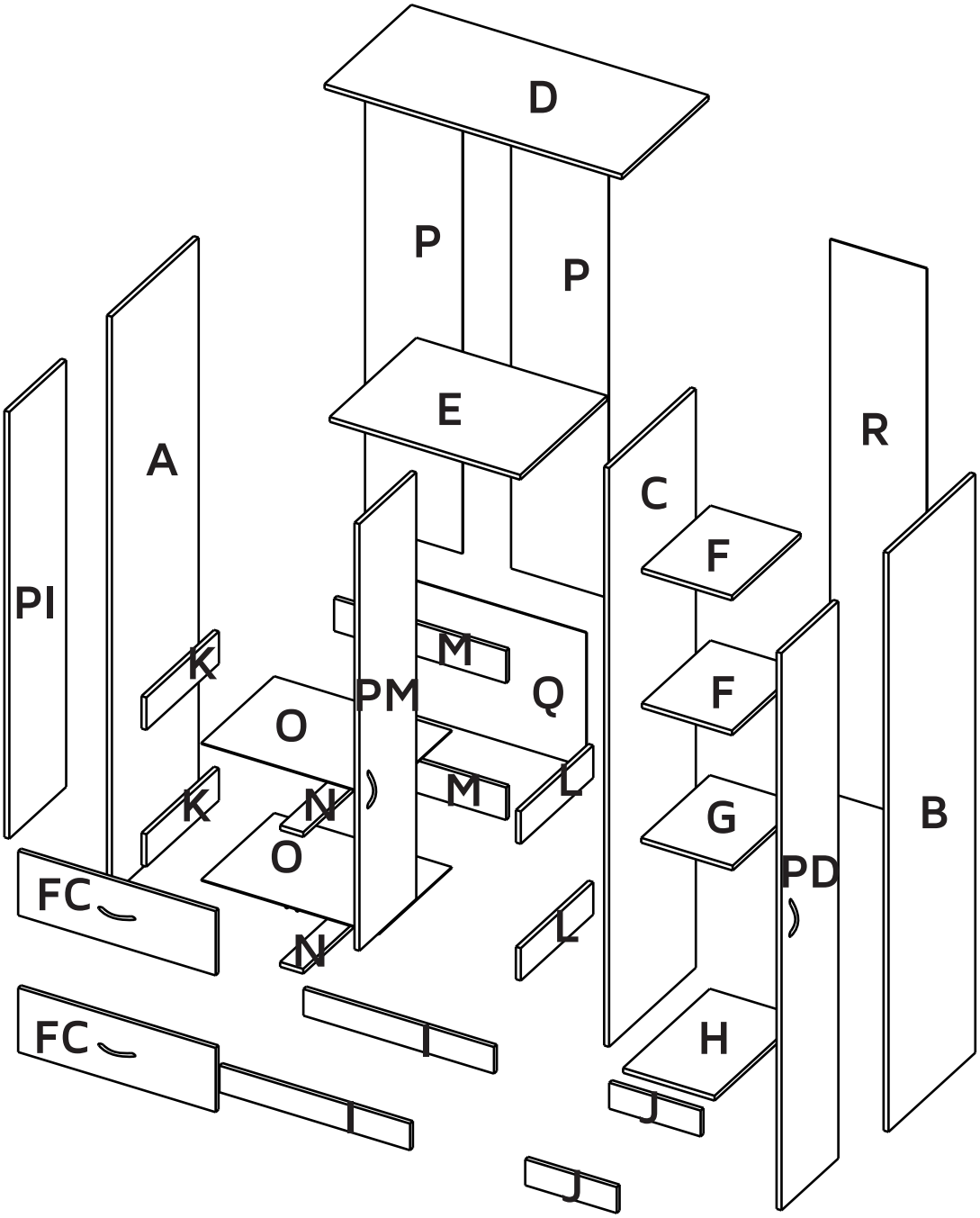

A - x1	**F** - x2	**K** - x2	**PI** - x1	**Q** - x1
B - x1	**G** - x1	**L** - x2	**PM** - x1	**R** - x1
C - x1	**H** - x1	**M** - x2	**PD** - x1	
D - x1	**I** - x2	**N** - x2	**O** - x2	
E - x1	**J** - x2	**FC** - x2	**P** - x2	

MAX SUGGESTED LOADS

CARGAS MÁXIMAS SUGERIDAS

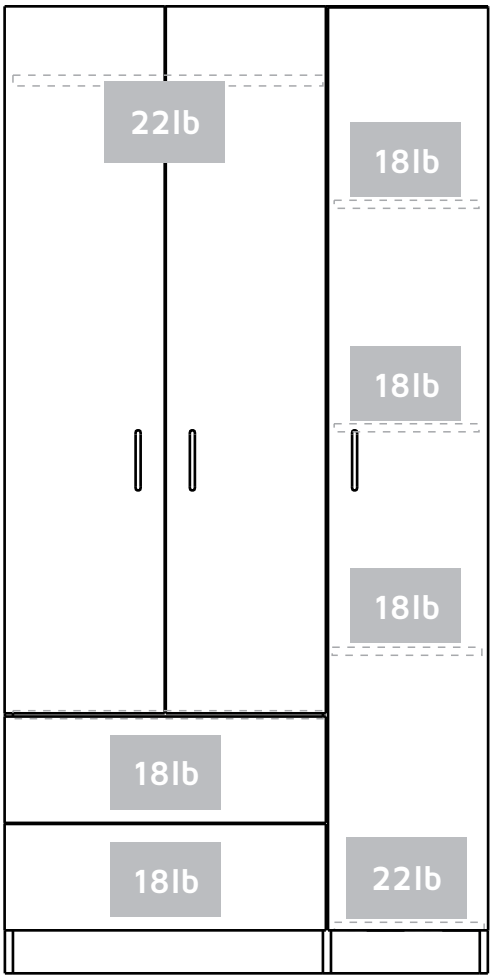

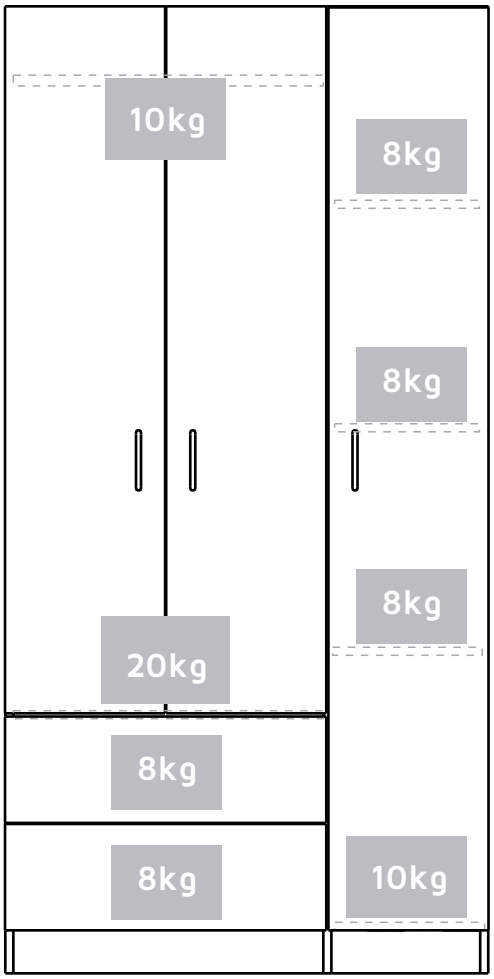

ASSEMBLY RECOMMENDATIONS

Two people are recommended to assemble the product.

Assemble the cabinet on a flat, smooth surface, preferably on a carpeted floor or the carton box of the product.

Carefully read the assembly instructions and identify every wood and hardware part before start assemblying the cabinet.

RECOMENDACIONES DE ENSAMBLE

Ensamble el mueble entre dos personas.

Ensamble el mueble sobre una superficie plana y lisa, preferiblemente sobre un tapete o el cartón de la caja

Lea cuidadosamente las instrucciones e identifique todas las piezas y herrajes antes de empezar a armar el mueble.

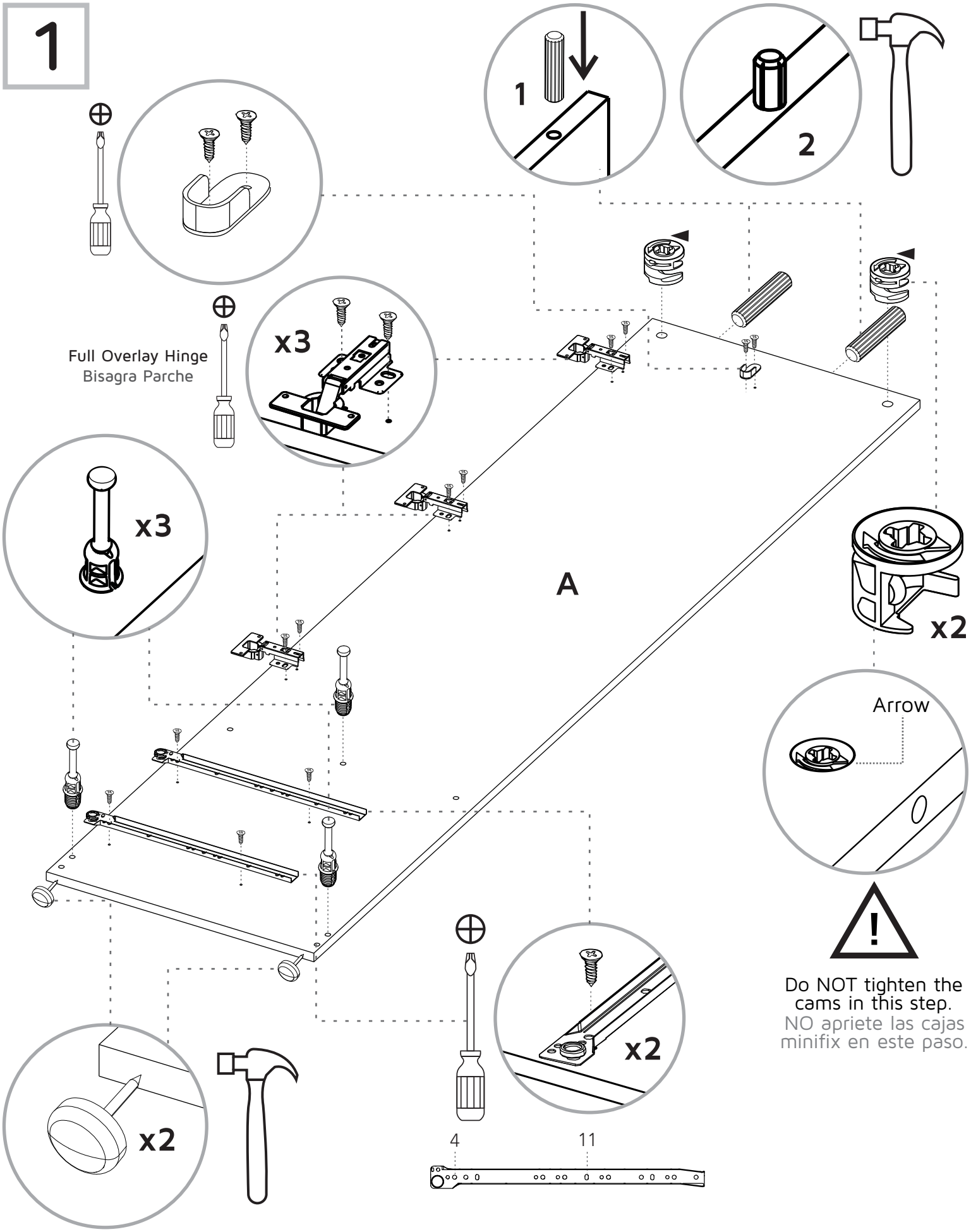
1
1
2
Full Overlay Hinge
Bisagra Parche
x3
x3
A
x2
Arrow
Do NOT tighten the cams in this step.
NO apriete las cajas minifix en este paso.
x2
x2
4
11

2

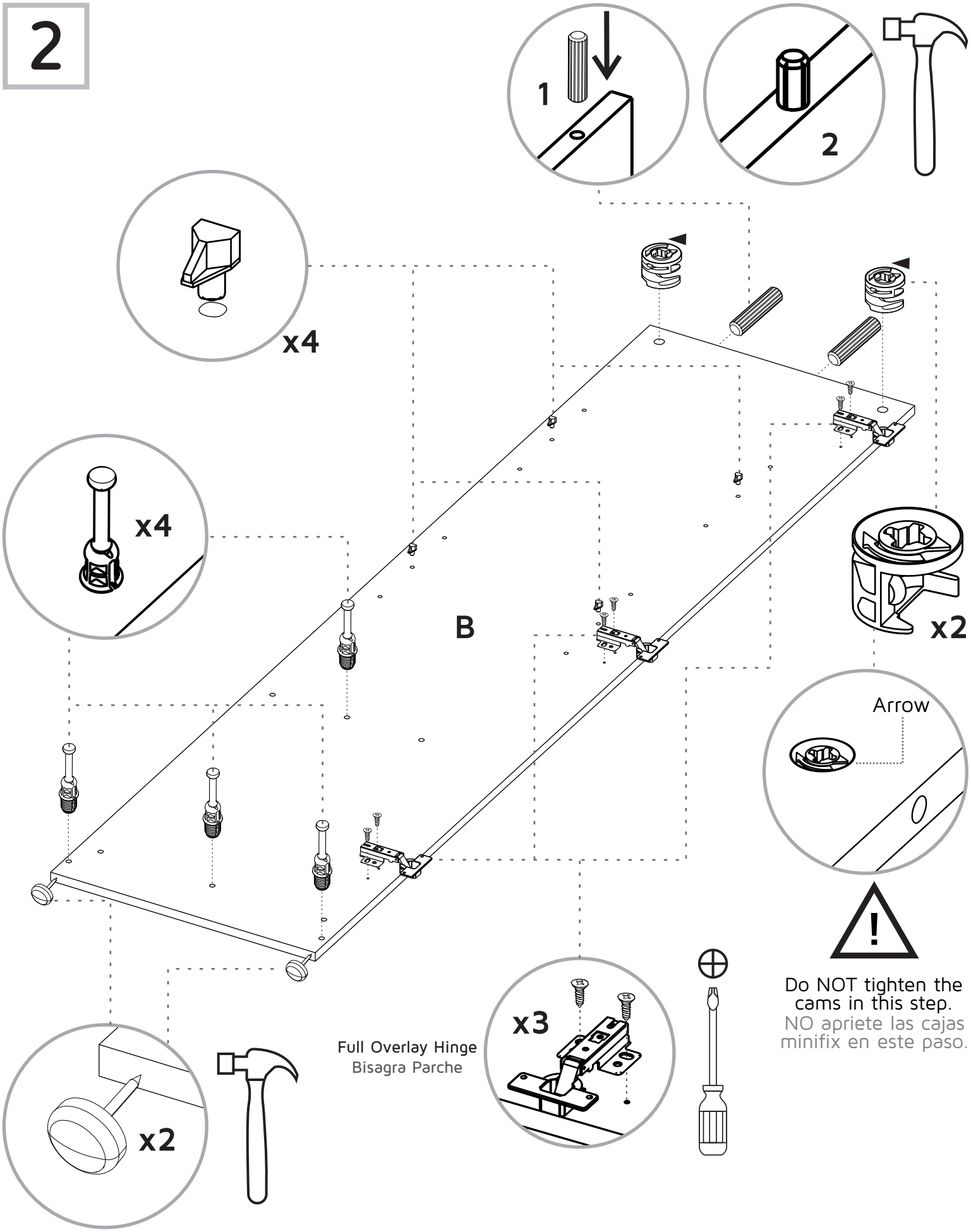

Do NOT tighten the cams in this step.
NO apriete las cajas minifix en este paso.

3

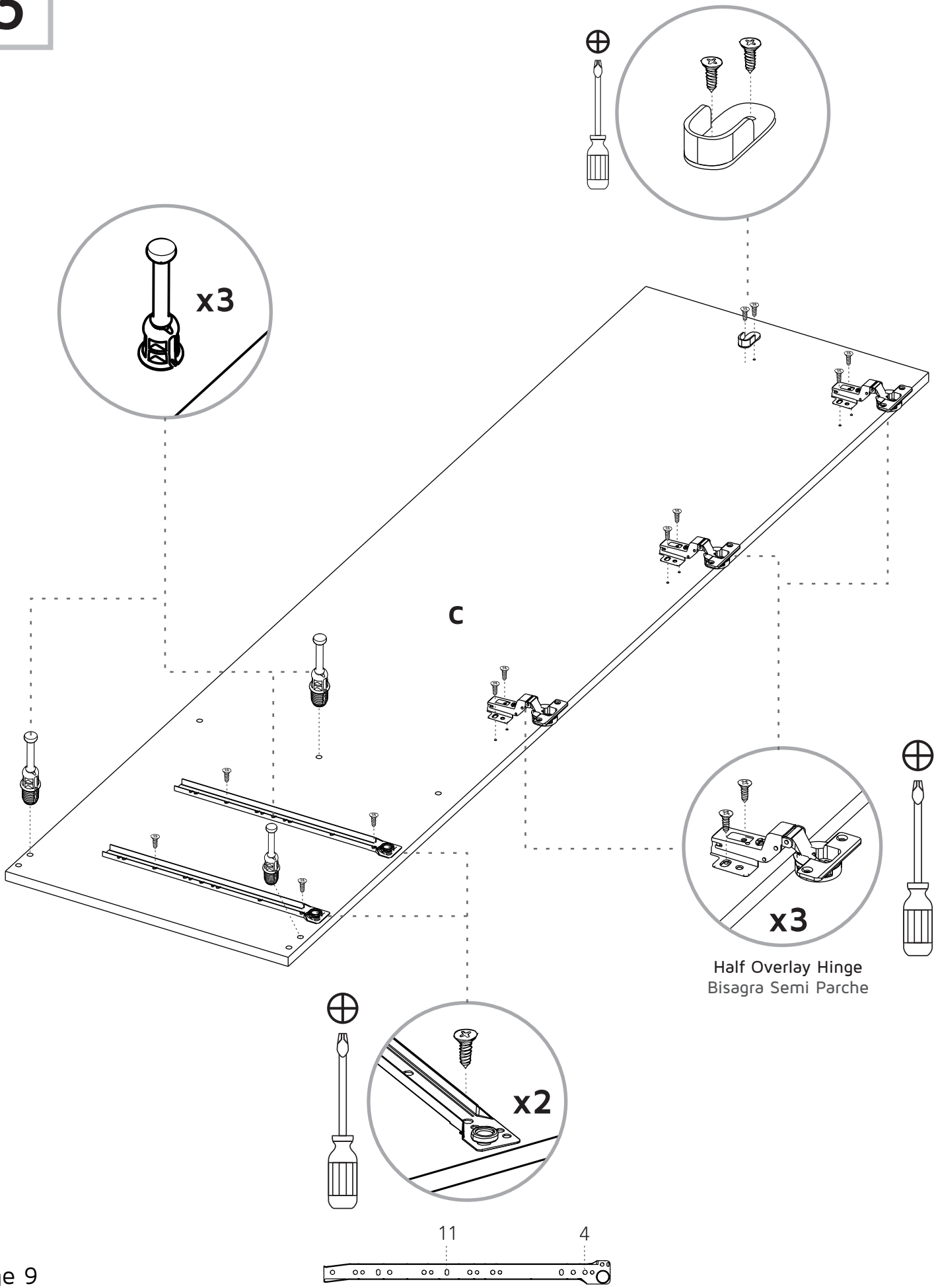

4

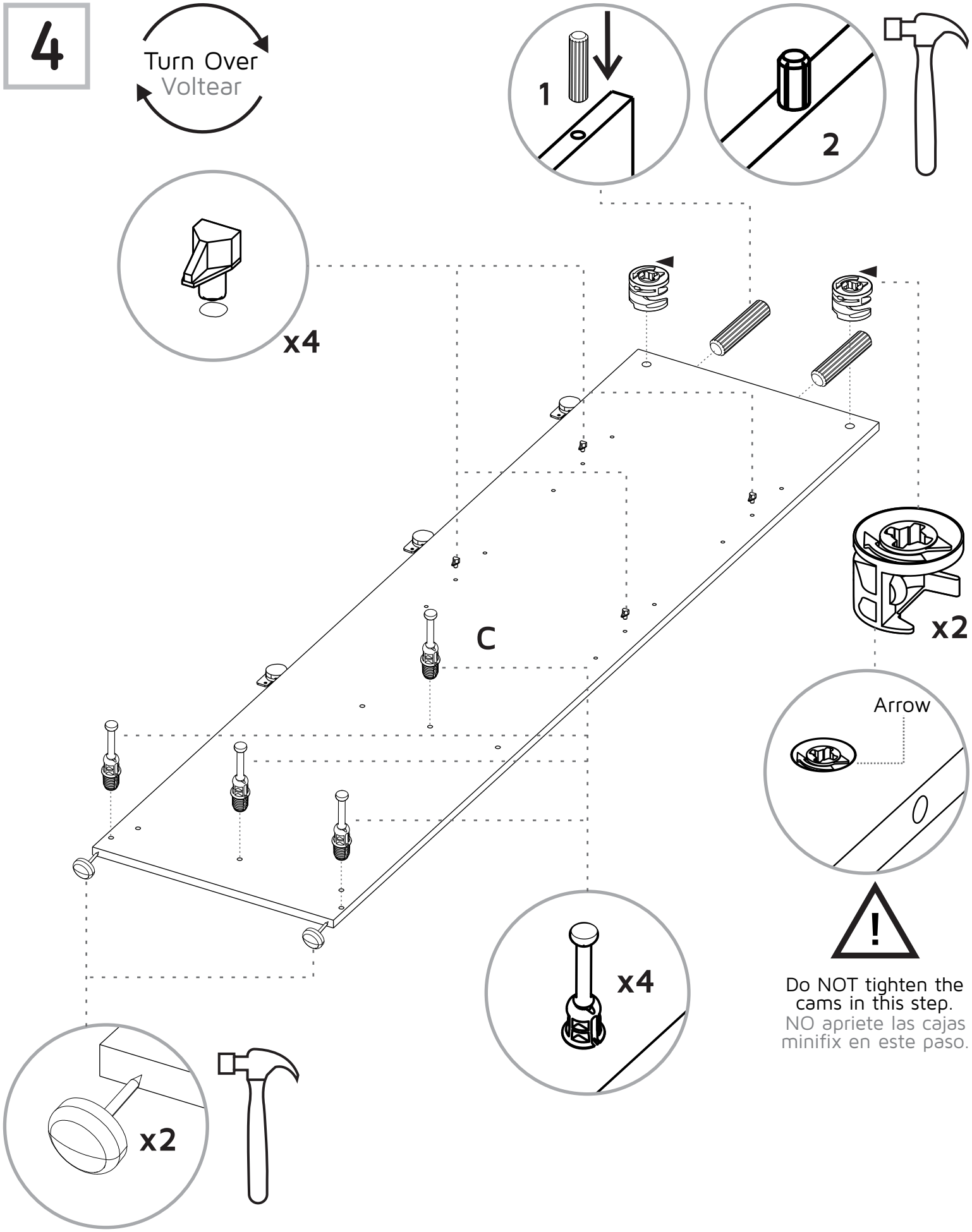

Do NOT tighten the cams in this step.
NO apriete las cajas minifix en este paso.

5

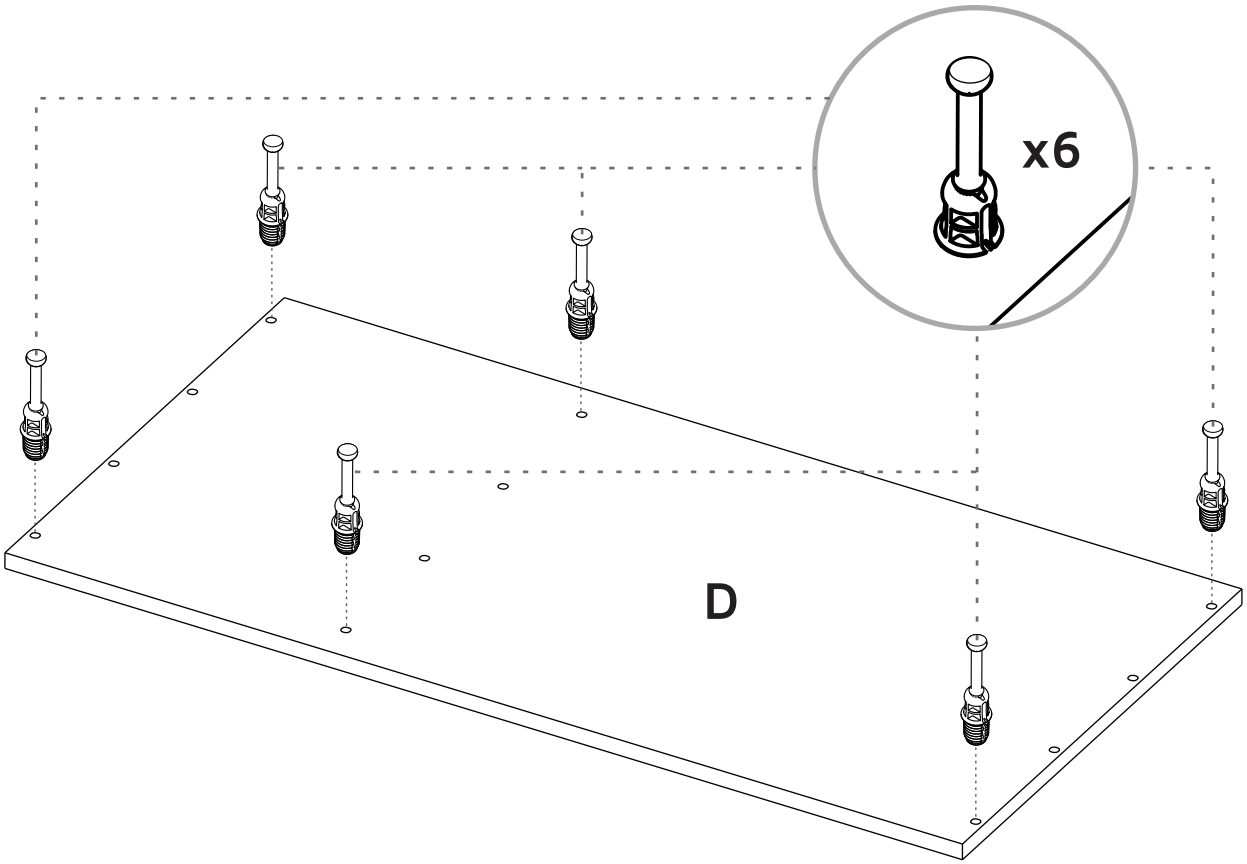

6

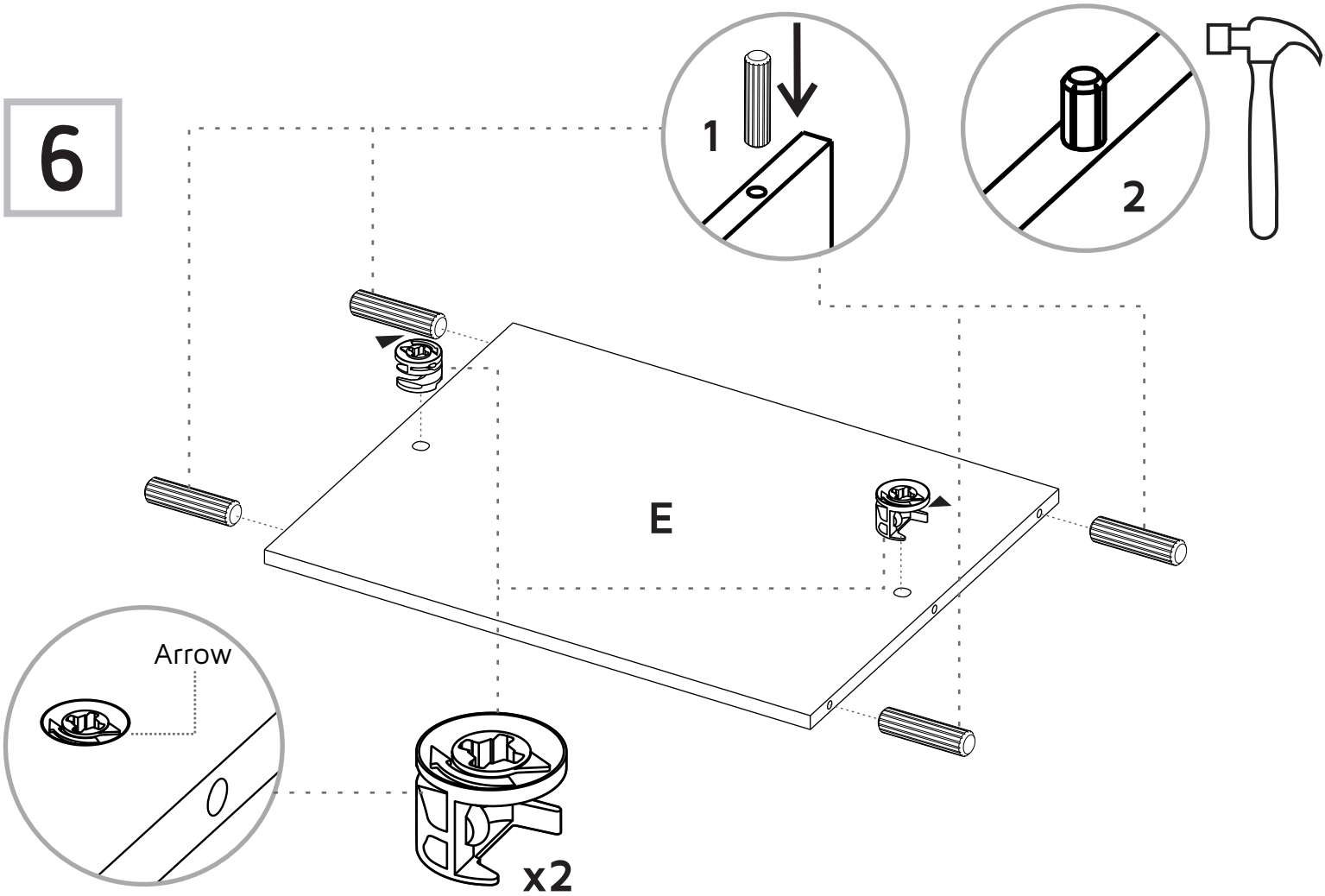

7

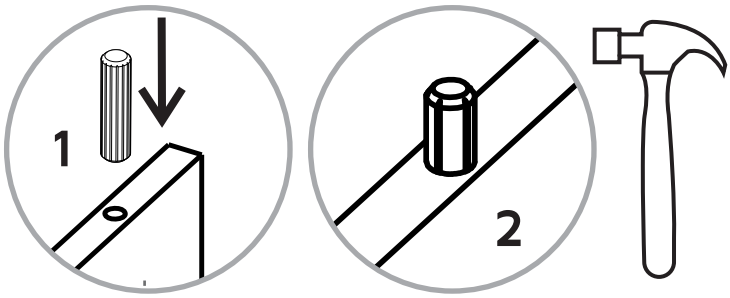

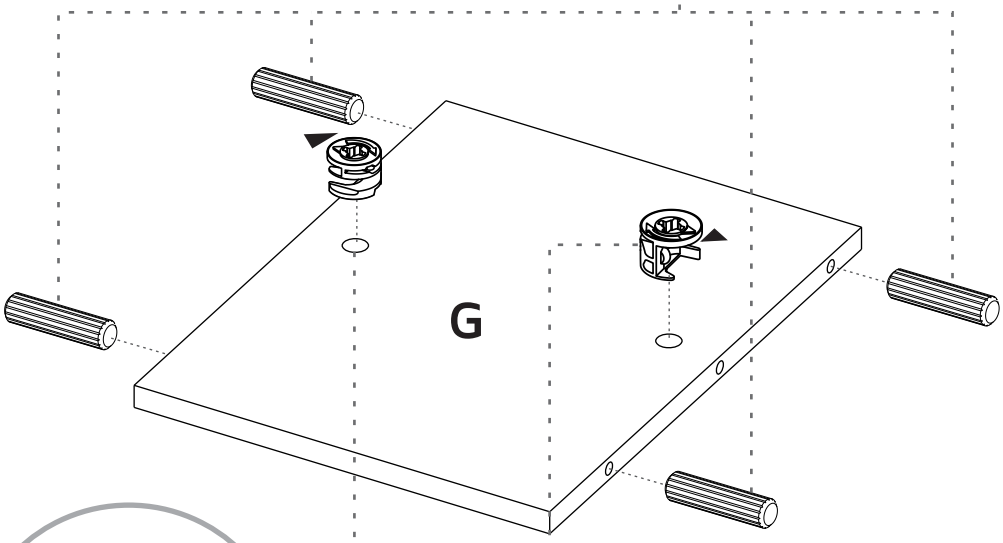

8

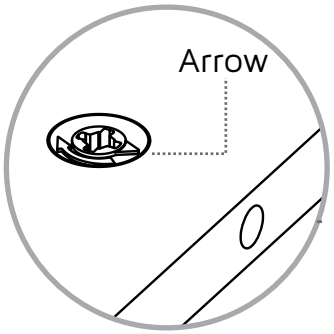

Do NOT tighten the cams in this step.
NO apriete las cajas minifix en este paso.

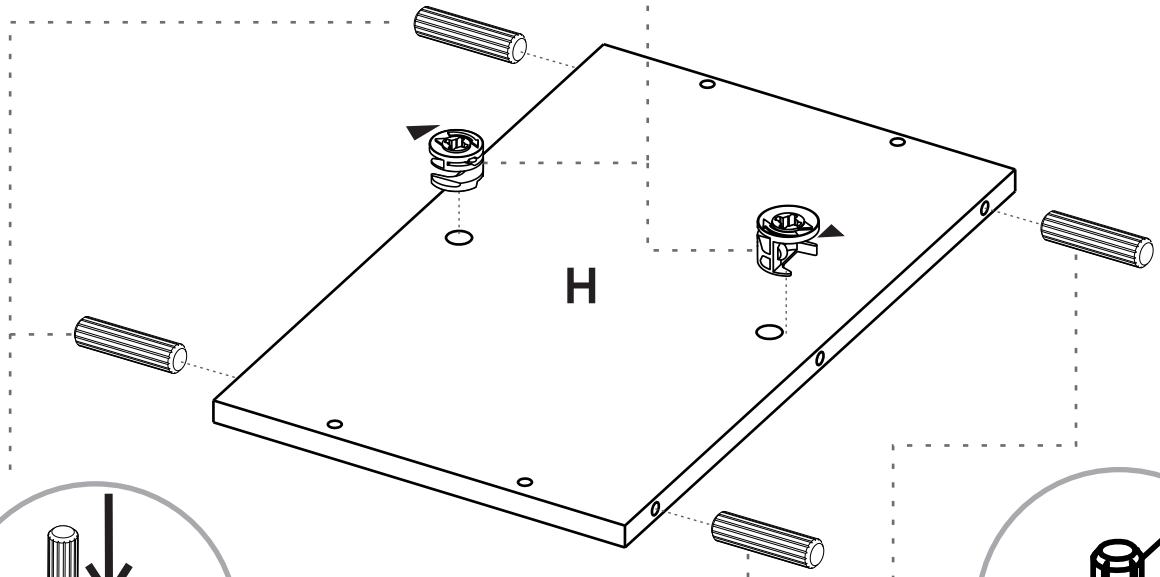

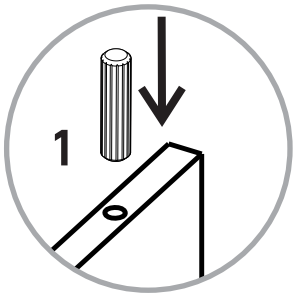

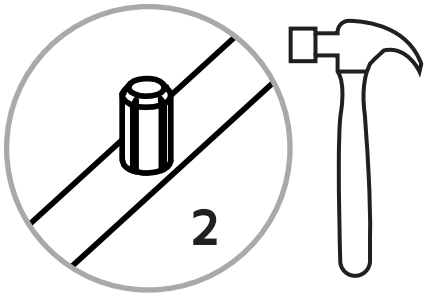

9

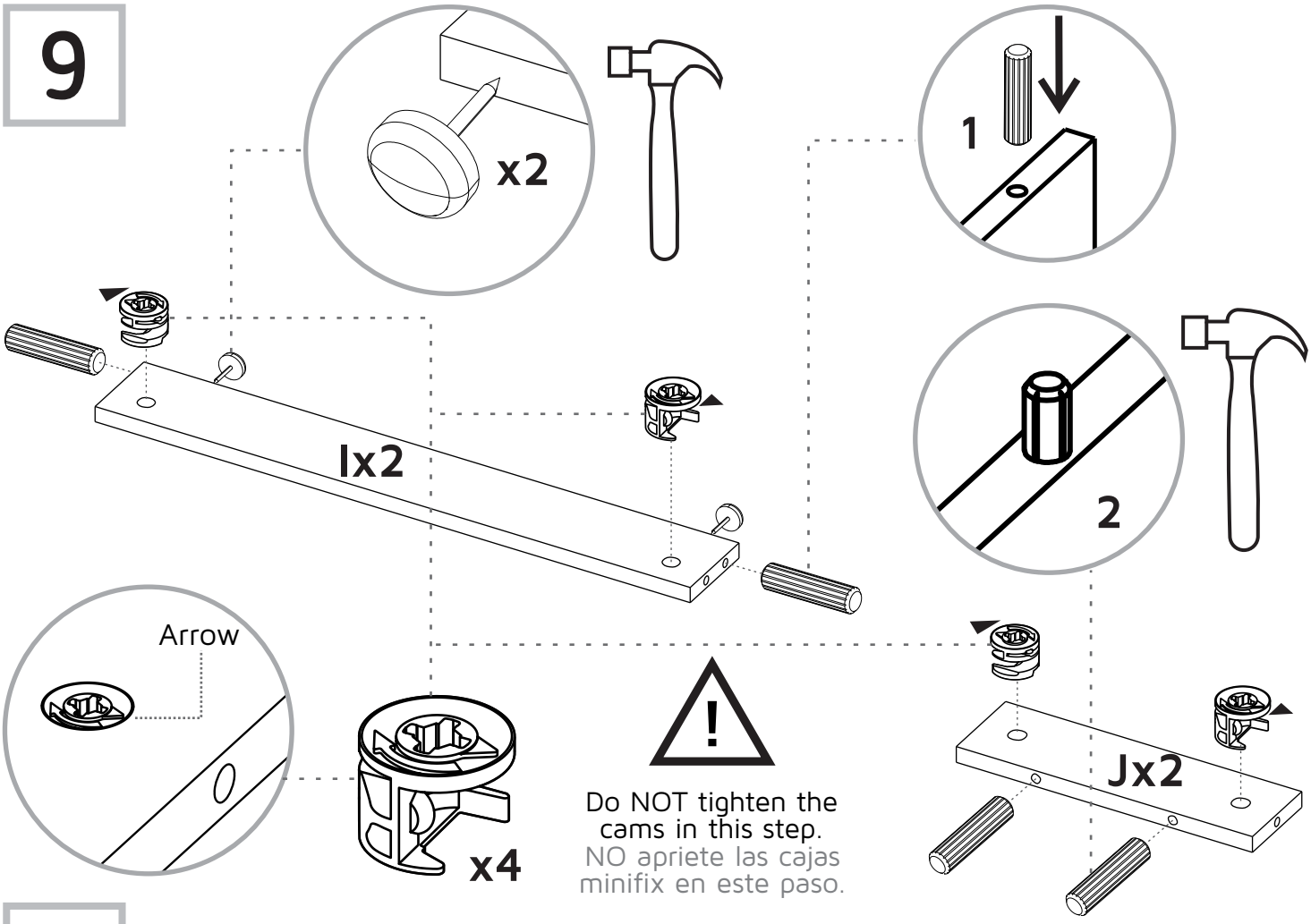
x2
1
Ix2
2
Arrow
x4
Do NOT tighten the cams in this step.
NO apriete las cajas minifix en este paso.
Jx2

10

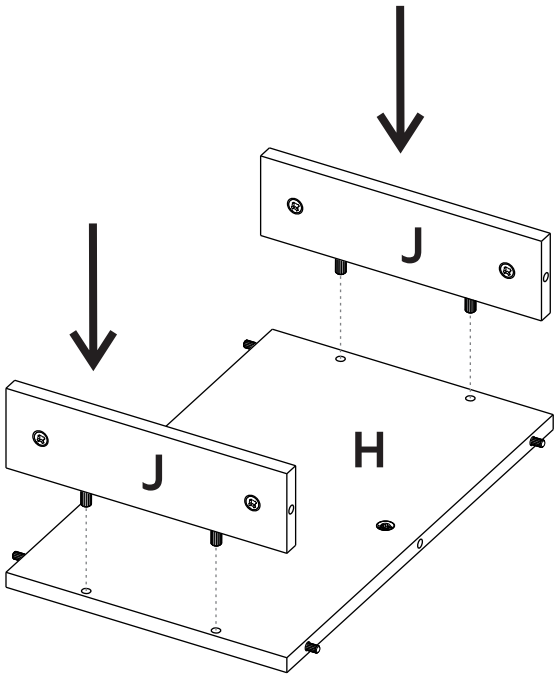
J
J
H

11

Turn minifix cams to the right to tighten.

Gire las cajas minifix hacia la derecha para apretar las piezas.

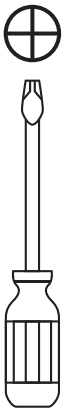

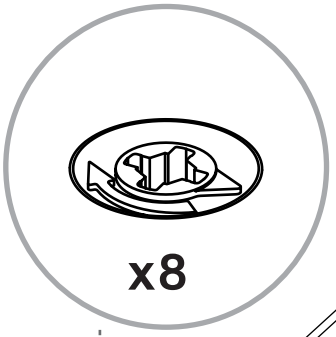

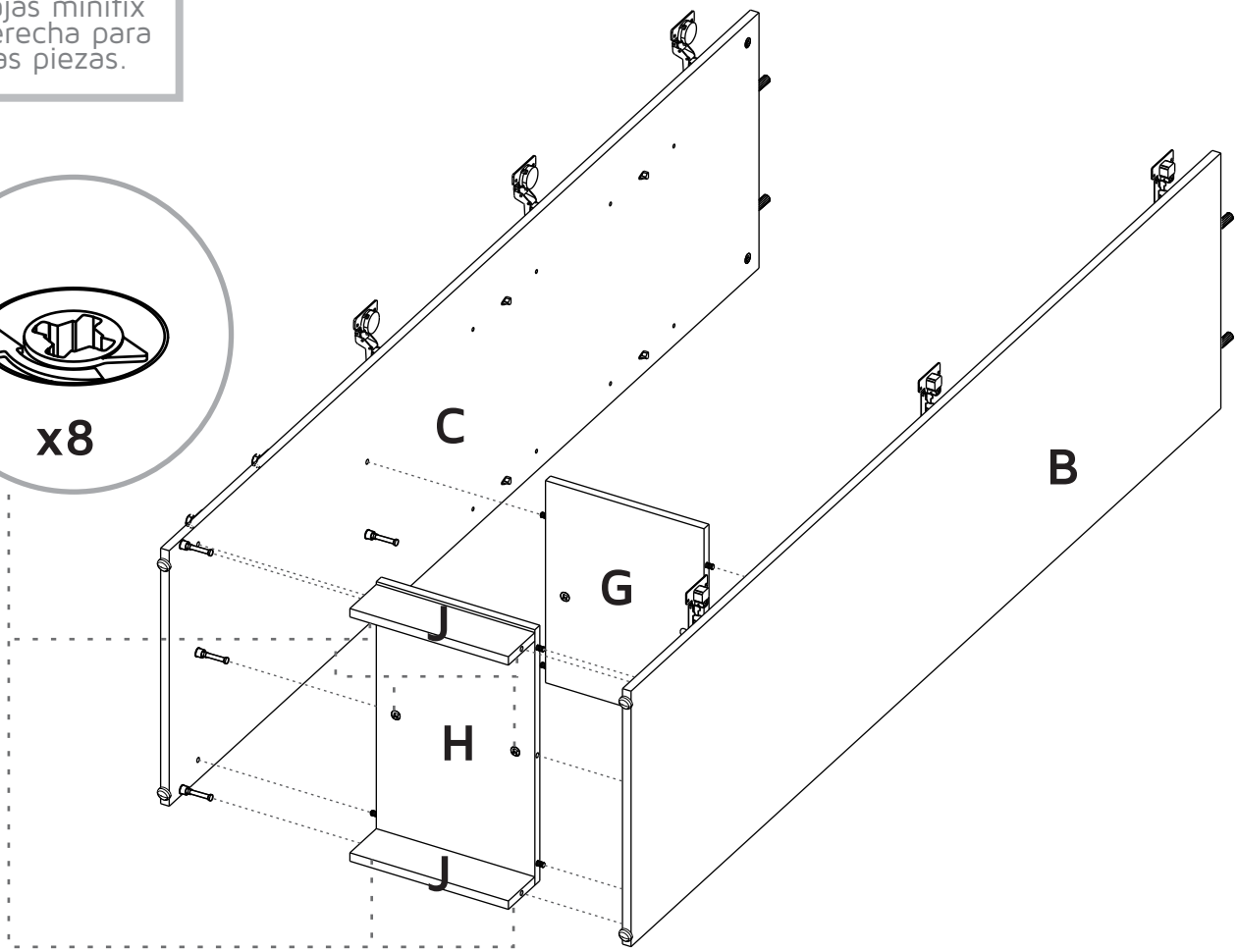

12

Turn minifix cams to the right to tighten.

Gire las cajas minifix hacia la derecha para apretar las piezas.

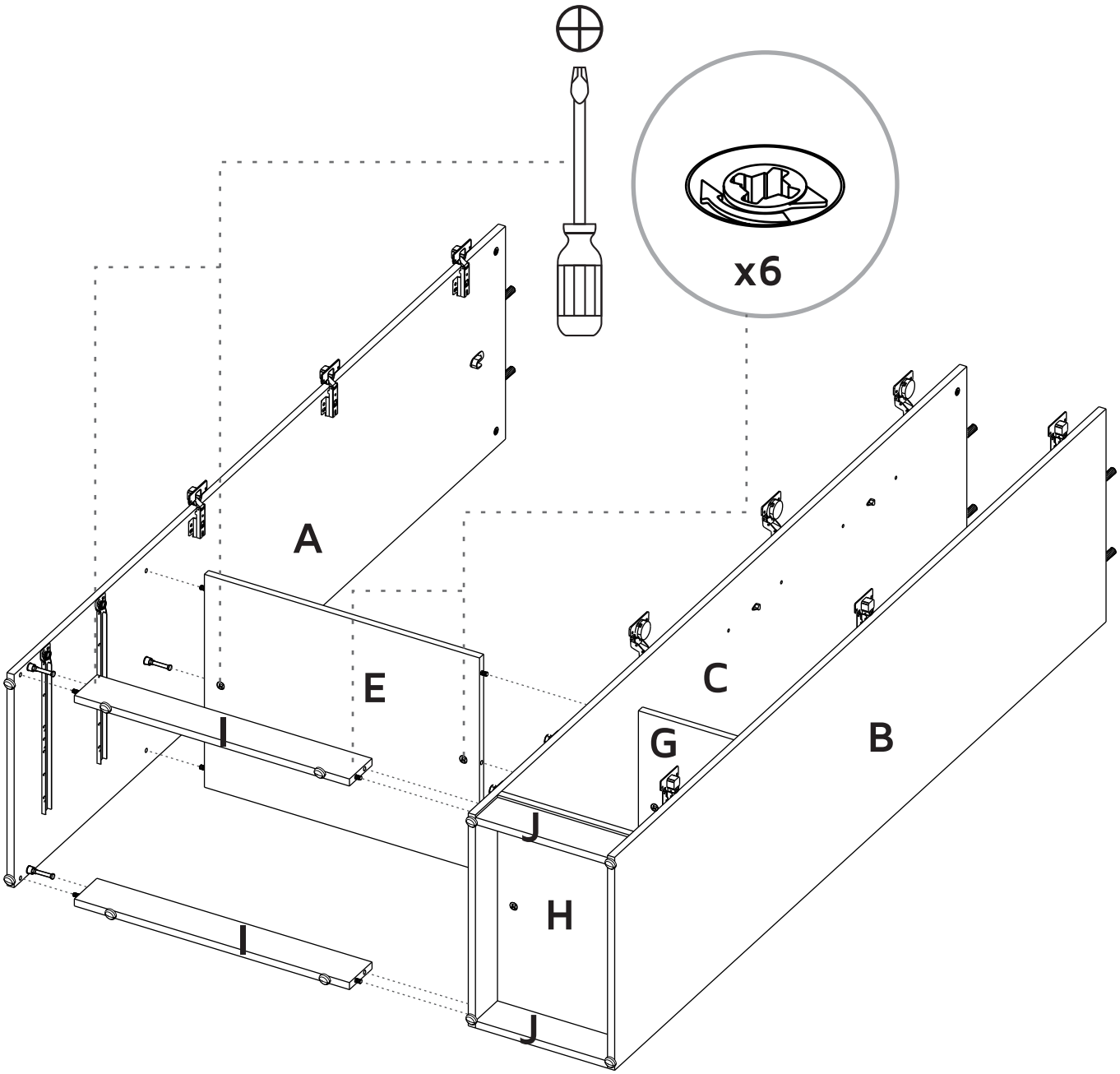

13

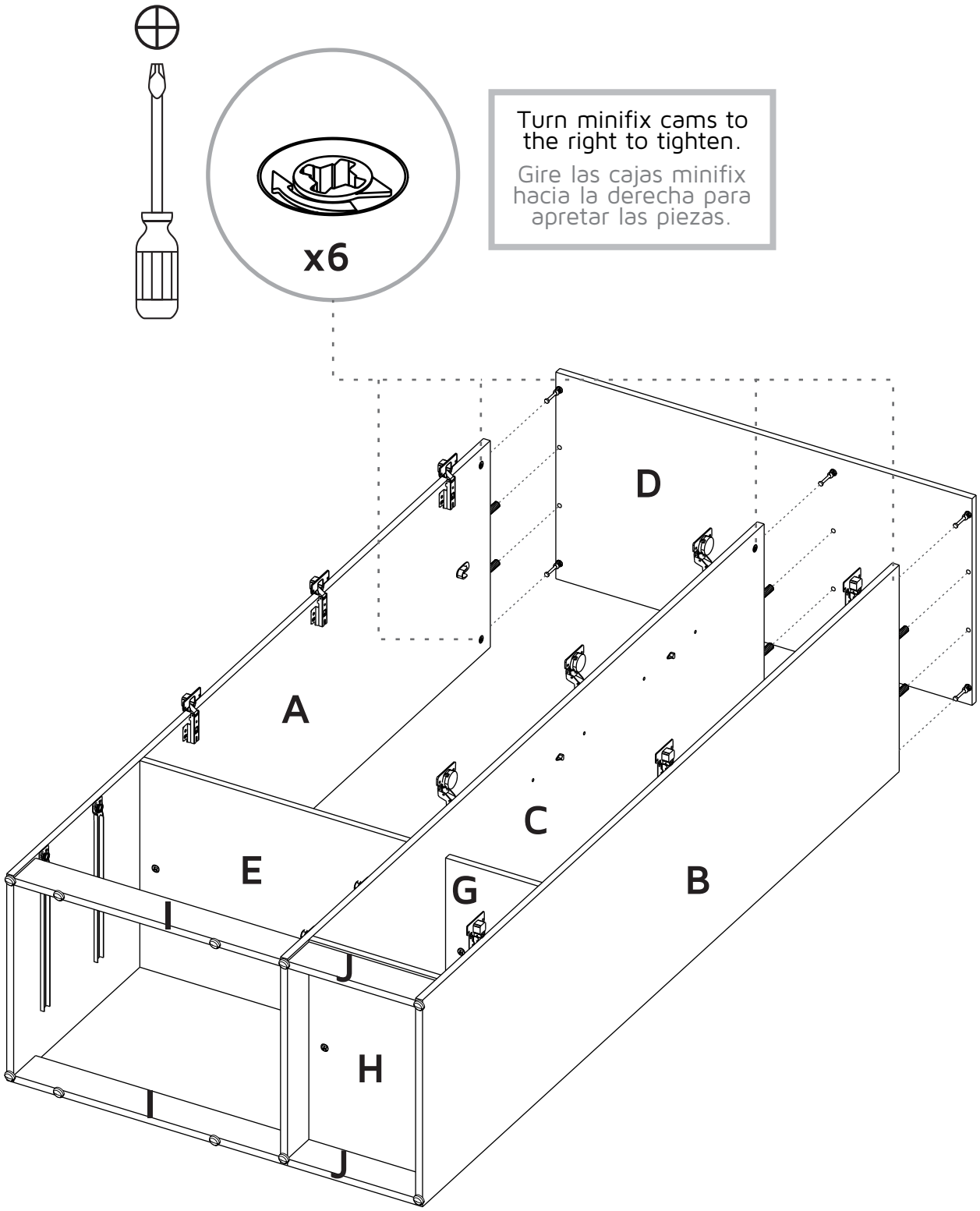

Turn minifix cams to the right to tighten.

Gire las cajas minifix hacia la derecha para apretar las piezas.

14

Be careful turning over the cabinet.
Tenga cuidado al voltear el mueble.

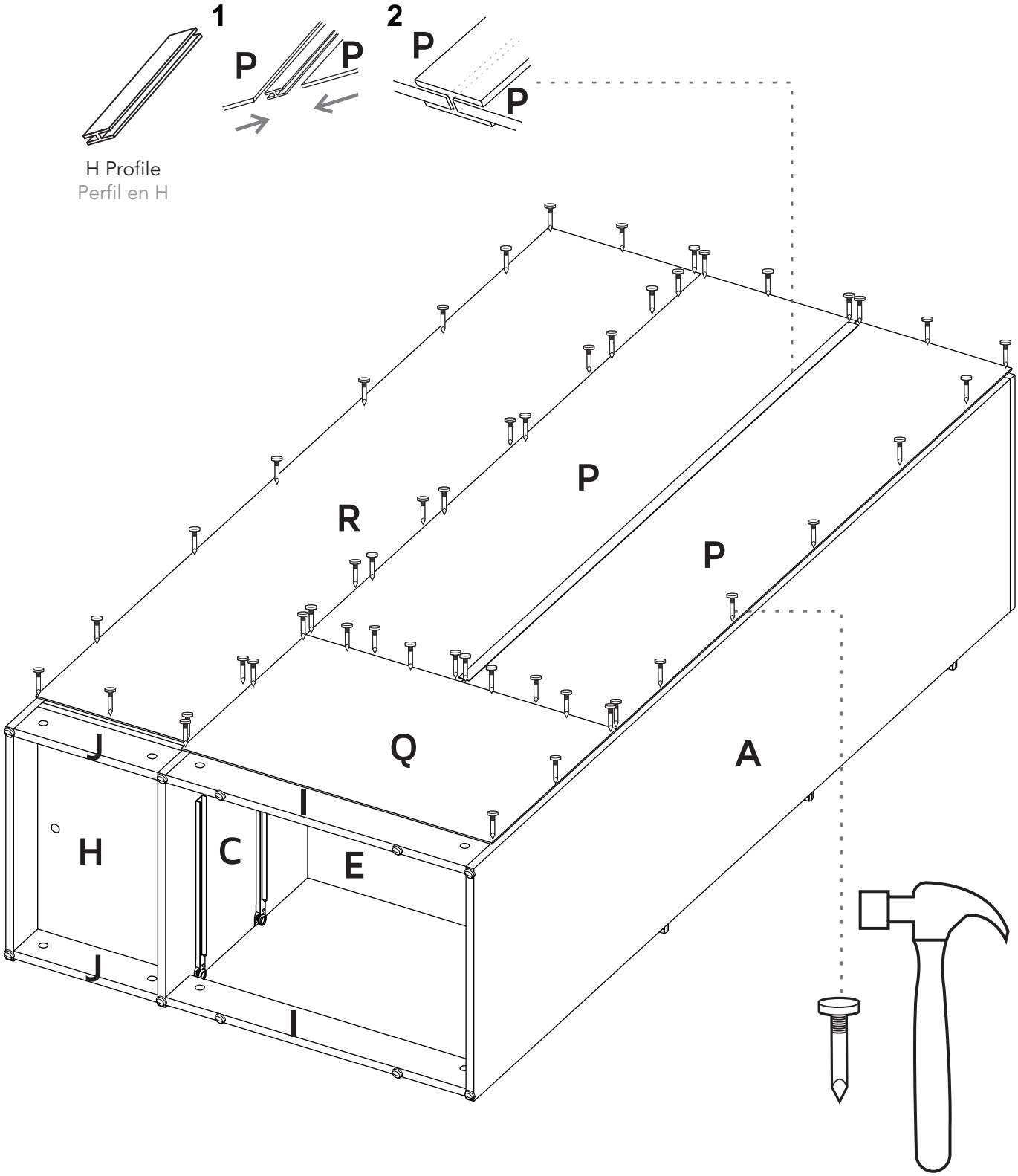

15

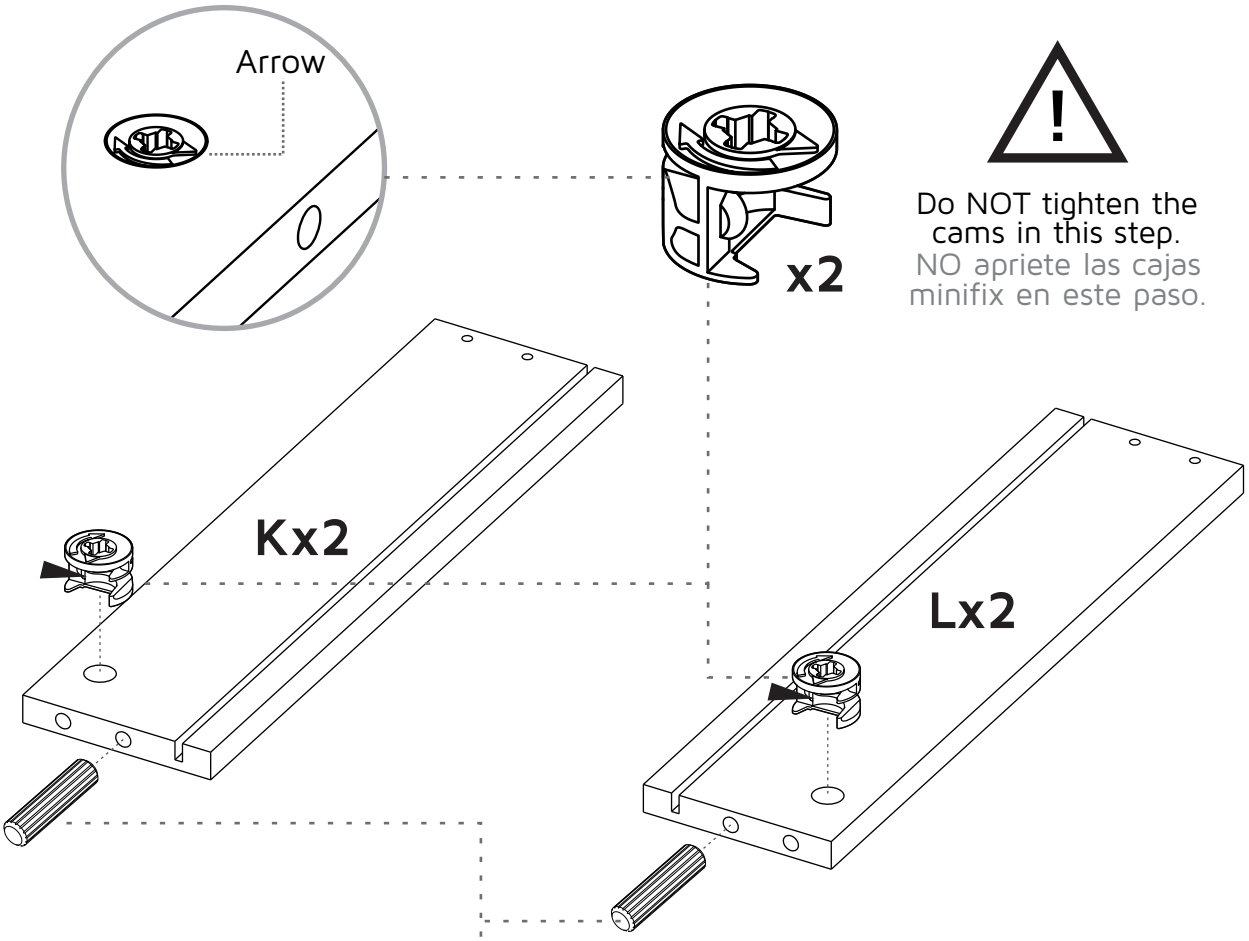

Do NOT tighten the cams in this step.
NO apriete las cajas minifix en este paso.

16

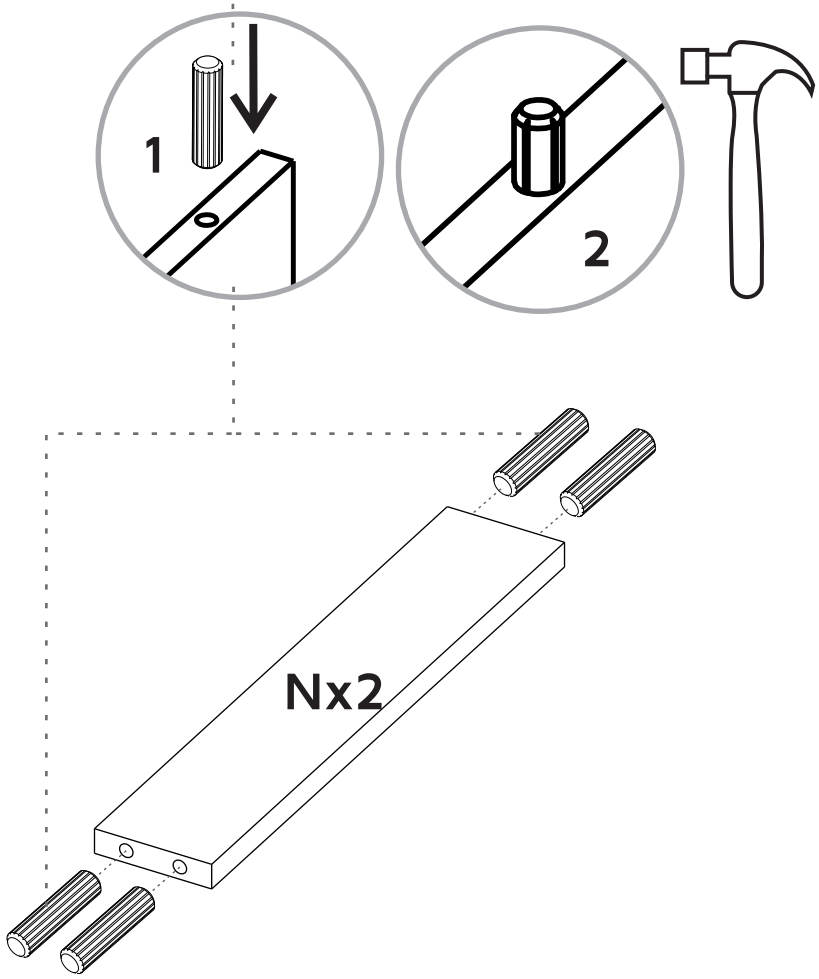

17

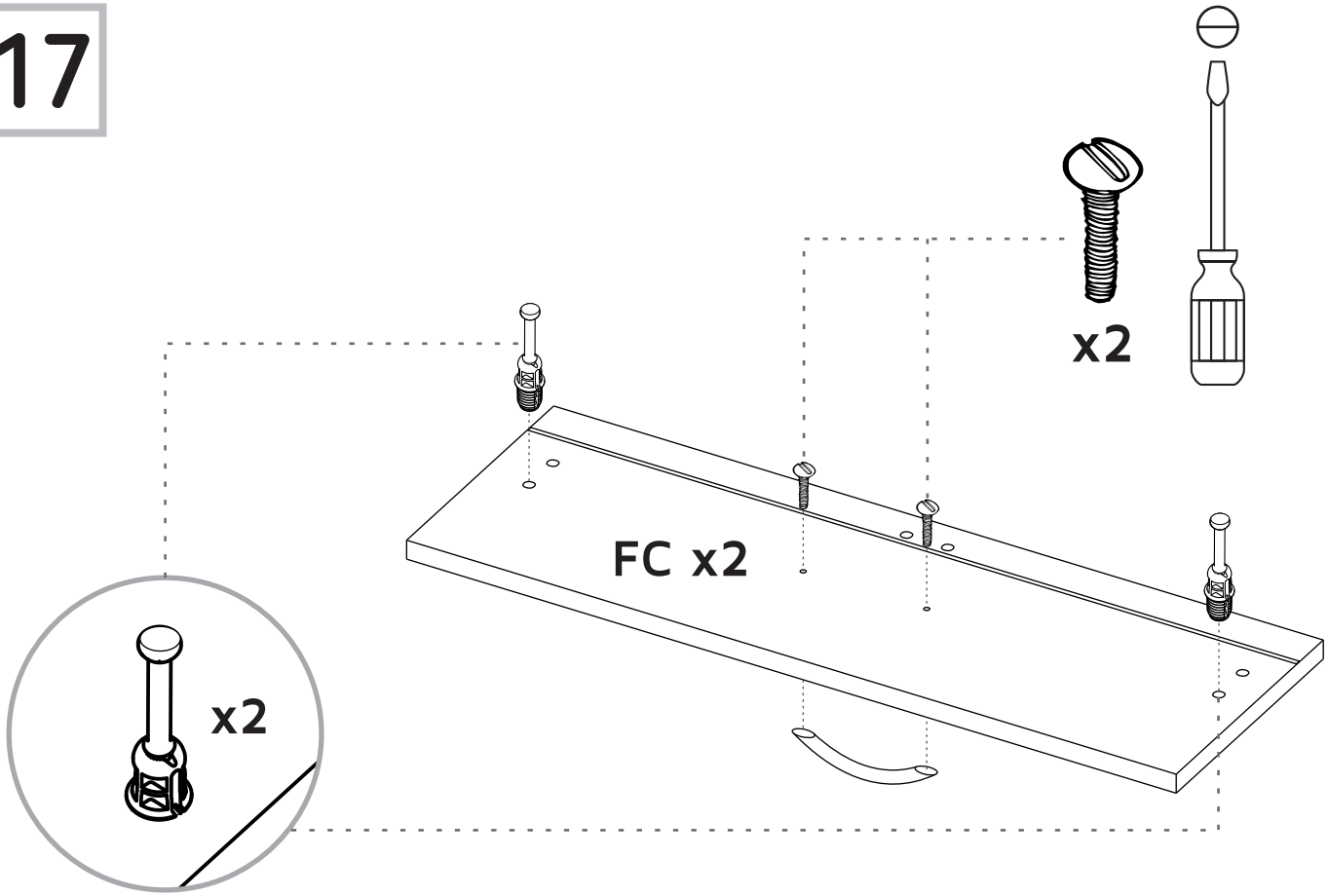

18 x2

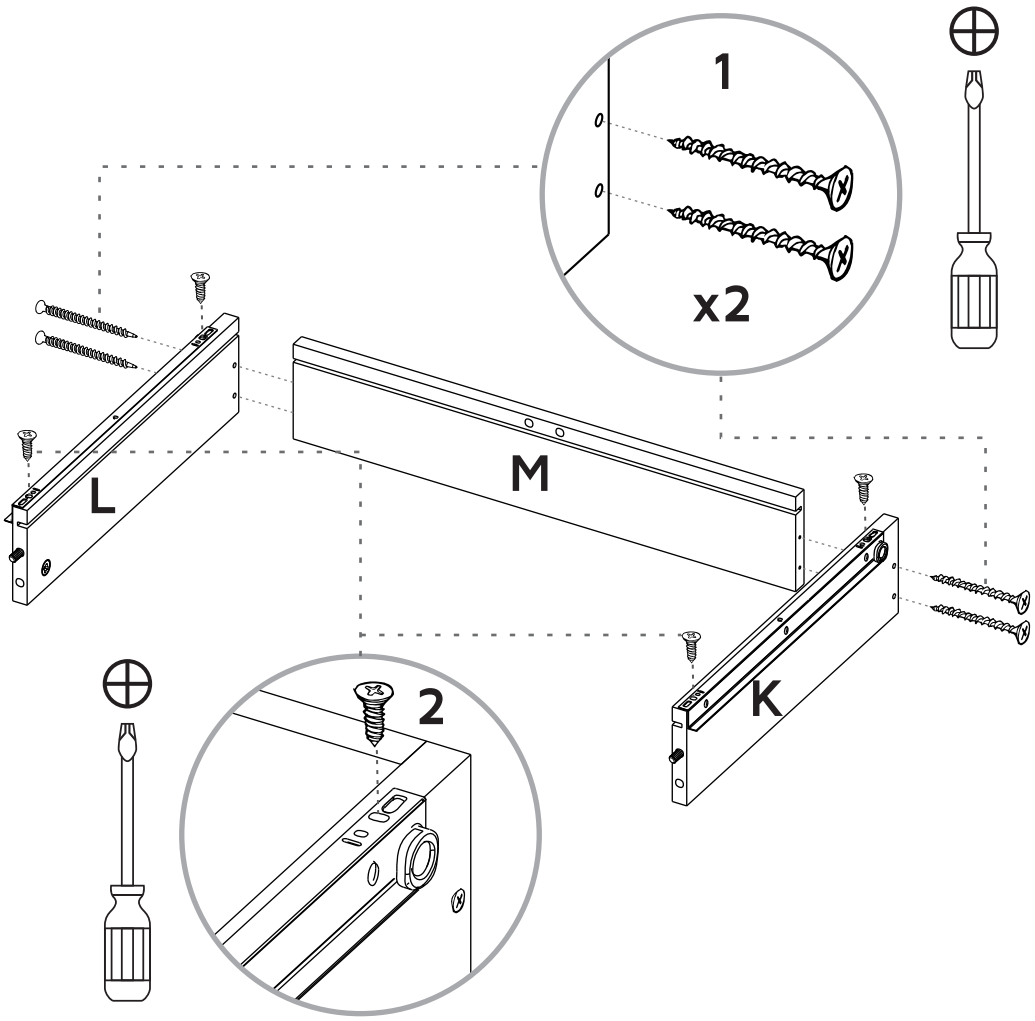

19 x2

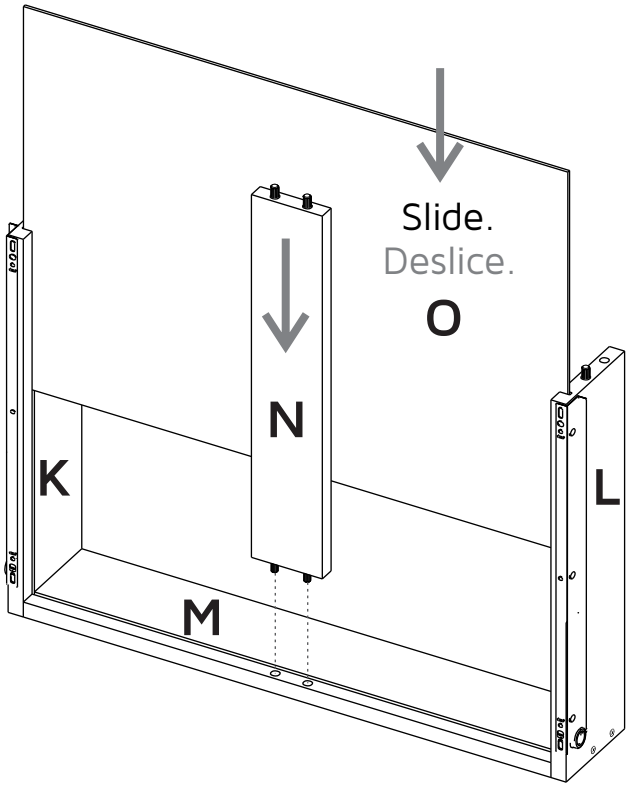

20 x2

Turn minifix cams to the right to tighten.

Gire las cajas minifix hacia la derecha para apretar las piezas.

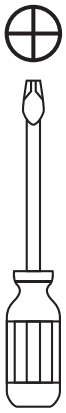

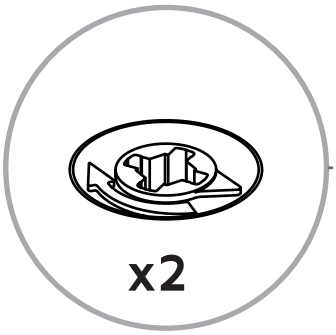

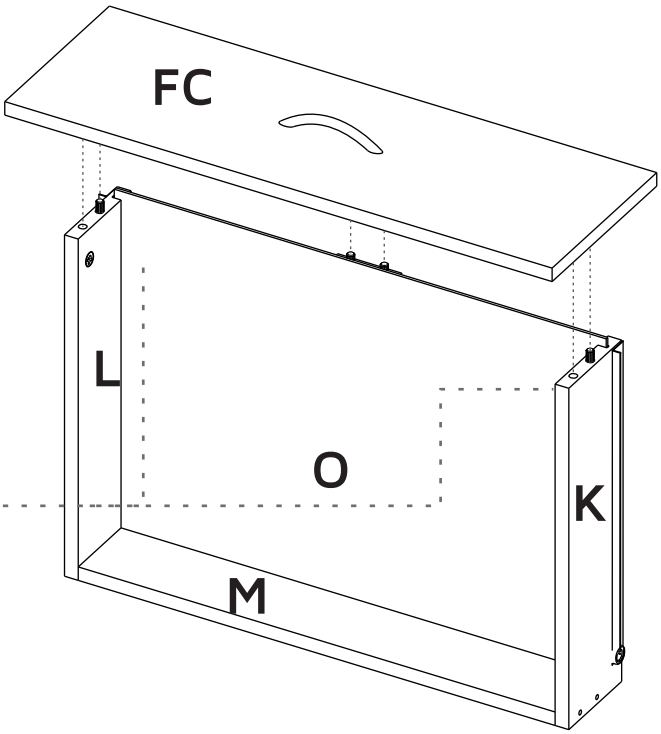

21 Door Installation
Instalación de las Puertas

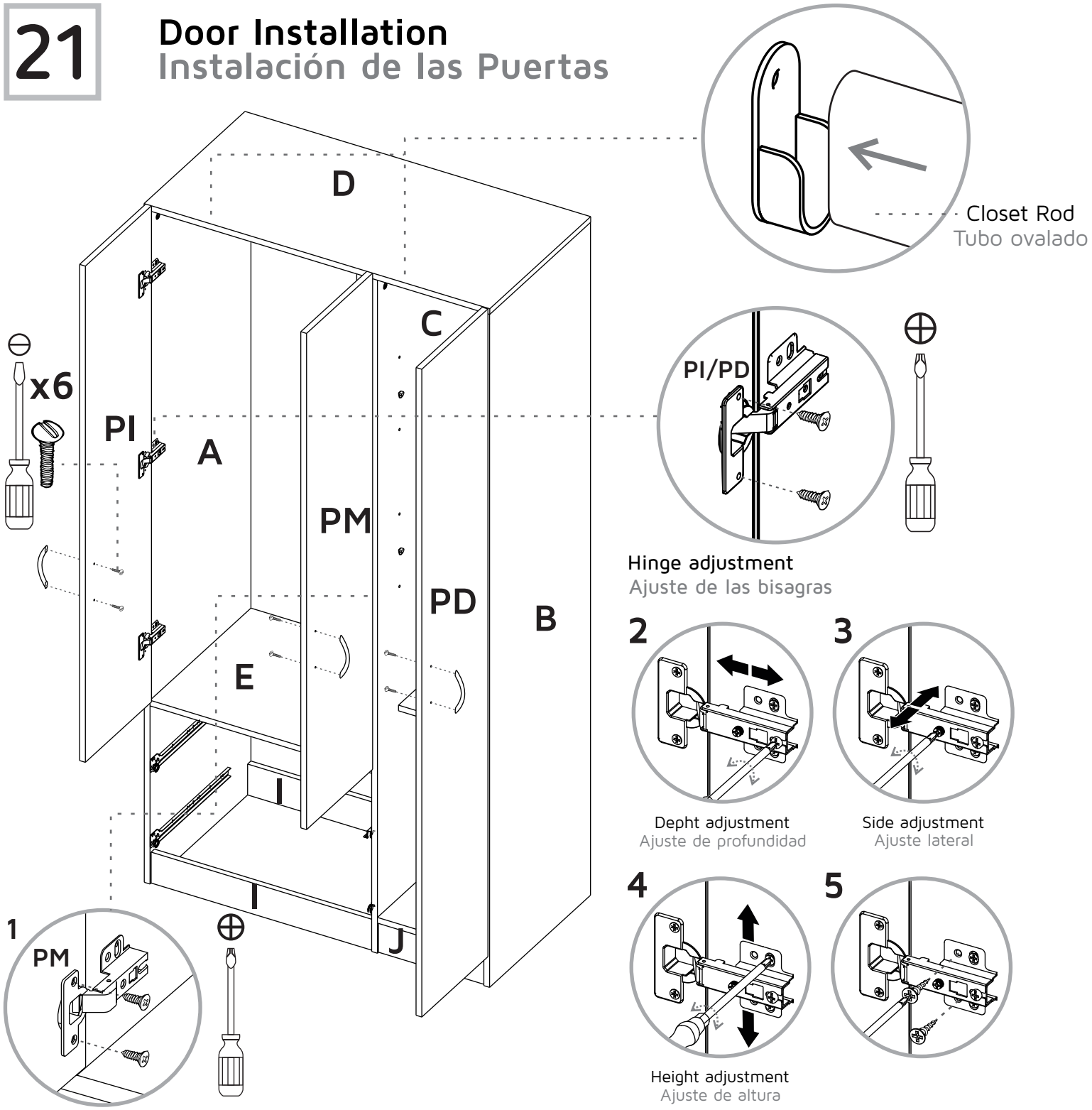

Hinge adjustment
Ajuste de las bisagras

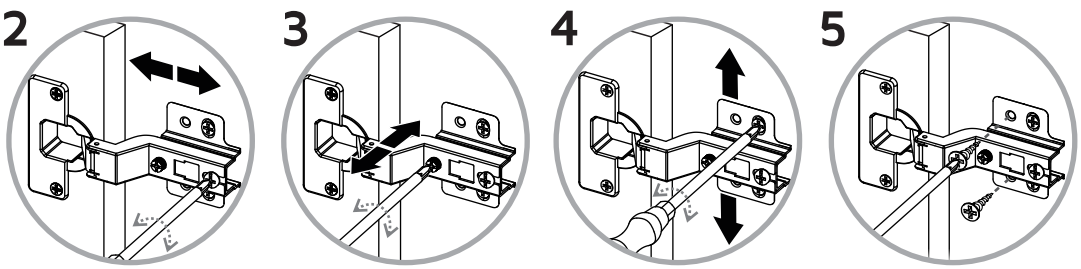

Depht adjustment
Ajuste de profundidad

Side adjustment
Ajuste lateral

Height adjustment
Ajuste de altura

22

Fix your cabinet to the wall
Fija el mueble a la pared

1 Drill on the markings with a 5/16" drill bit.
Debes perforar en los puntos con taladro y una broca de 5/16"

2 Insert the wall anchors inside the drillings.
Inserta los chazos plásticos en las perforaciones.

3 Place the cabinet and secure it with the screws.
Ubica el mueble y asegúralo con los tornillos.

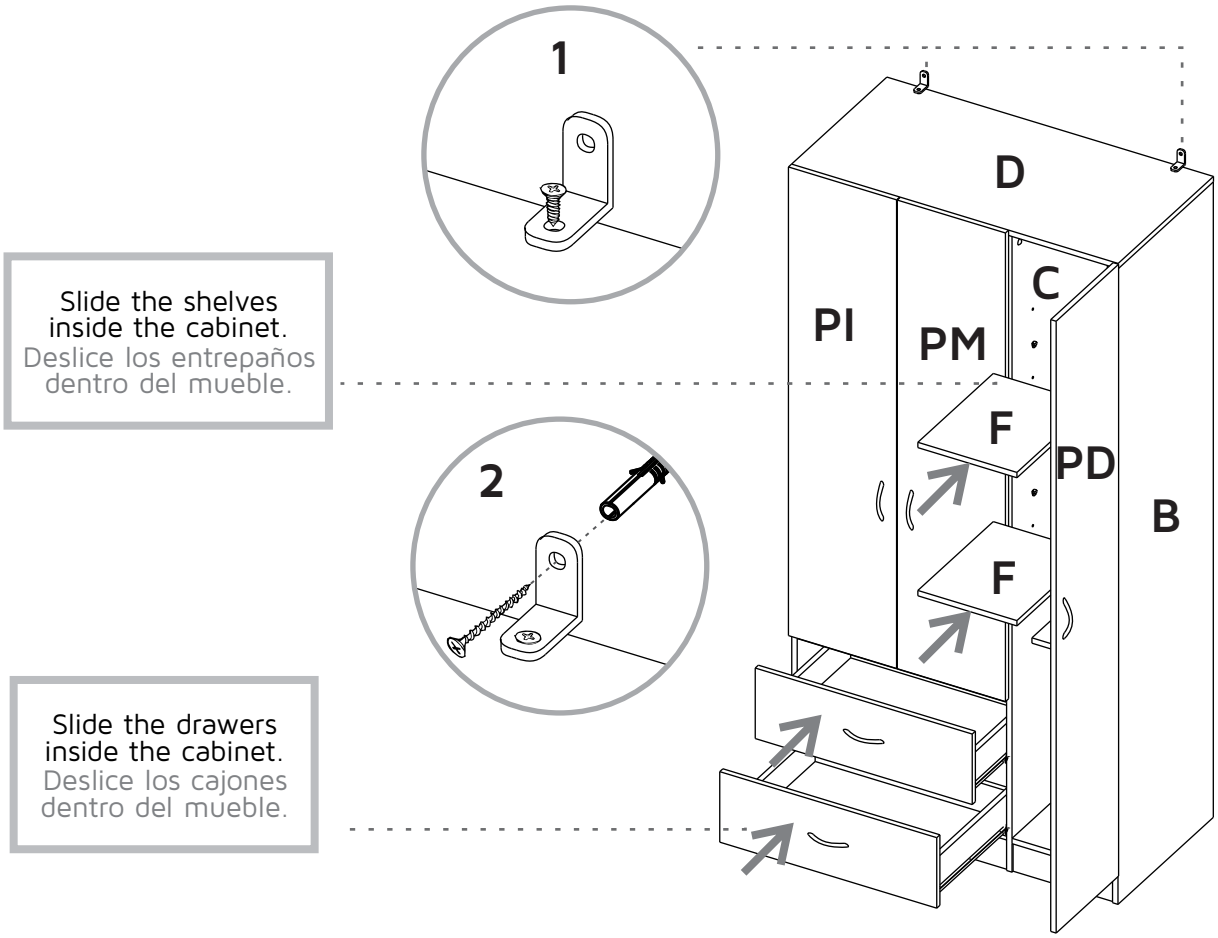

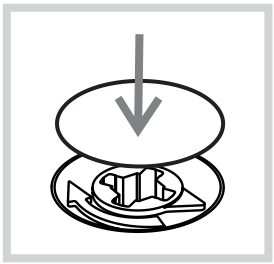

After you finish the adjustment of the cams, cover them with the cover caps.

Después de ajustar todas las cajas minifix, cúbralas con las tapas adhesivas.

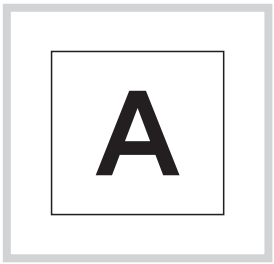

After you finish assembling the cabinet, take off the adhesive letters.

Al terminar de armar, desprenda las letras adhesivas.

WARRANTY POLICY

Furniture has a 1 year warranty coverage in wooden parts and hardware pieces since its manufacturing date, which you can see in the lot number printed on the product box and the assembly instructions leaflet.

Warranty covers materials and workmanship imperfections which impair the assembly or correct functioning of the cabinet.

This warranty is not valid if the defects or imperfections are caused by the incorrect following of the assembly instructions, warnings and recommendations, misuse, intentional damage, fire or flood, or after modifications or any kind of alteration, or repaired by someone not authorized, when itś been assembled 3 months after the date of purchase. These defects MUST be reported before the warranty coverage period ends. Once the product has been assembled, the company will not be responsible for defective and/or damaged parts.

This warranty is ONLY valid for the ORIGINAL PURCHASER, it doesn't apply if the product has been resold, rented, etc.

Furniture will take no liability for incidental or consequential damages caused to or by the product (This may not apply in your state).

To make this warranty valid you must write to our customer service email describing the product defect, lot number and submitting your sales reciept or proof of purchase, or contact us at our customer service line. Replaced parts will be under the productś original warranty coverage period. Damaged parts will become property of the company.

There are no other warranties applicable to this product.